80TH STREET NE IMPROVEMENT PROJECT

CONSTRUCTION PLANS FOR GRADING, WATERMAIN, SANITARY FORCEMAIN, STORM DRAINAGE, TRAIL AND BITUMINOUS SURFACING IMPROVEMENTS TO SERVCE FUTURE WEST OTSEGO E-8 SCHOOL.

CITY OF OTSEGO PROJECT NO. 15-07

BENCHMARKS: TOP NUT HYDRANT ON THE SOUTH SIDE OF 80TH STREET; APPROXIMATELY 250 FEET EAST OF THE INTERSECTION OF 80TH STREET AND MACIVER AVENUE. ELEVATION = 850.11 FEET

DATUM: NGVD 1929

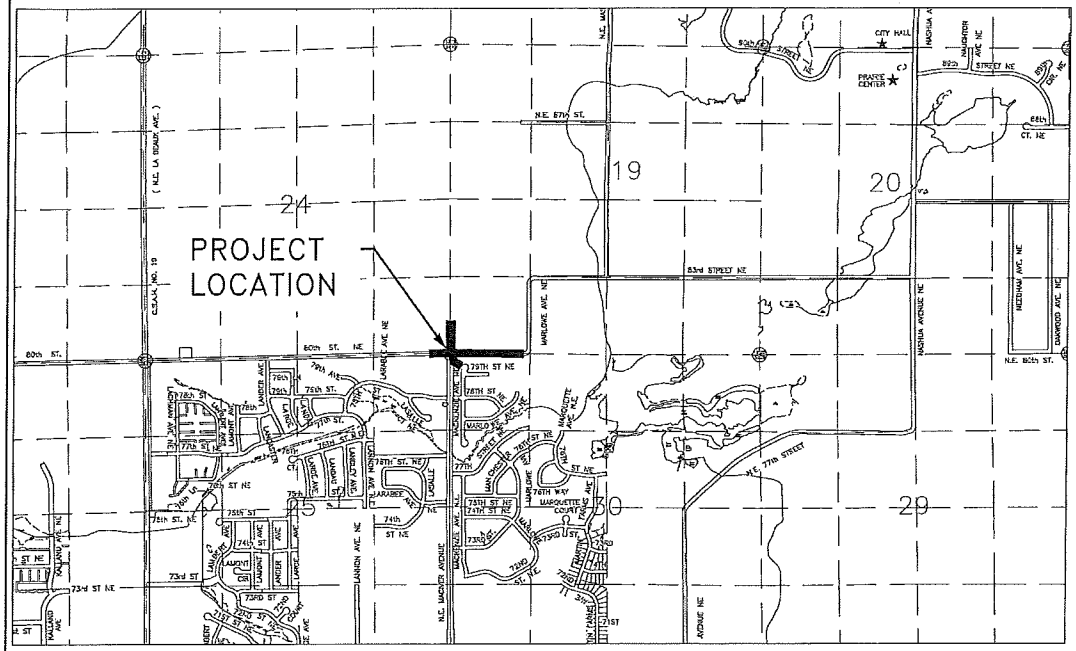

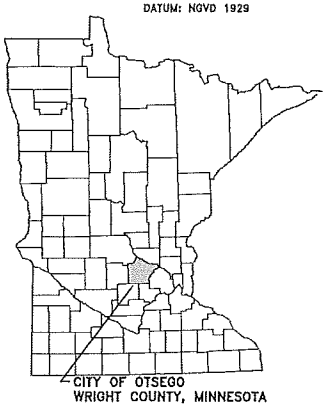

N

1000 0 1000 2000
SCALE IN FEET

GOVERNING SPECIFICATIONS

THE 2014 EDITION OF THE MINNESOTA DEPARTMENT OF TRANSPORTATION "STANDARD SPECIFICATIONS FOR CONSTRUCTION" AND THE 2014 EDITION OF THE "MATERIALS LAB SUPPLEMENTAL SPECIFICATIONS FOR CONSTRUCTION" SHALL GOVERN.

ALL FEDERAL, STATE AND LOCAL LAWS, REGULATIONS, AND ORDINANCES SHALL BE COMPLIED WITH IN THE CONSTRUCTION OF THIS PROJECT.

ALL TRAFFIC CONTROL DEVICES AND SIGNING SHALL CONFORM TO THE LATEST EDITION OF MINNESOTA MANUAL ON UNIFORM TRAFFIC CONTROL DEVICES, INCLUDING THE LATEST EDITION FIELD MANUAL FOR TEMPORARY TRAFFIC CONTROL ZONE LAYOUTS.

ALL REQUIREMENTS OF THE PROJECT MANUAL FOR THE 80TH STREET NE IMPROVEMENT PROJECT, CITY PROJECT NO. 15-07

WORK SHALL CONFORM TO THE STANDARD UTILITY SPECIFICATIONS AS PUBLISHED BY THE CITY ENGINEERS ASSOCIATION OF MINNESOTA, 1999

SHEET INDEX

THIS PLAN CONTAINS 38 SHEETS (TOTAL # INCL. TRAFFIC CONTROL AND CROSS SECTIONS)

SHEET NO.	DESCRIPTION
1	TITLE SHEET
2	ESTIMATED QUANTITIES AND STORM SEWER SCHEDULE
3	TYPICAL SECTIONS AND LEGEND
4	EARTHWORK SUMMARY, TABULATION & DETAILS
5-8	CONSTRUCTION DETAILS
9	EROSION AND SEDIMENT CONTROL DETAILS
10-11	TEMPORARY TRAFFIC CONTROL PLANS
12	TEMPORARY TRAFFIC CONTROL TABULATION
13-14	GRADING, EROSION AND SEDIMENT CONTROL PLANS
15-16	EASEMENTS
17	REMOVALS & EXISTING CONDITIONS PLANS
18-20	STREET AND STORM SEWER PLANS AND PROFILE
21-22	WATER AND SANITARY FORCEMAIN PLANS AND PROFILE
23-24	SIGNAGE AND STRIPING PLANS
25-28	SIGNAGE, STRIPING, AND TABULATION AND DETAILS
XS1-XS10	CROSS SECTIONS

THE SUBSURFACE UTILITY INFORMATION IN THIS PLAN IS UTILITY QUALITY LEVEL "D". THIS QUALITY LEVEL WAS DETERMINED ACCORDING TO THE GUIDELINES OF CI/ASCE 38-02, ENTITLED "STANDARD GUIDELINES FOR THE COLLECTION AND DEPICTION OF EXISTING SUBSURFACE UTILITY DATA."

I hereby certify that this plan, specification, or report was prepared by me or under my direct supervision and that I am a duly Licensed Professional Engineer under the laws of the State of Minnesota.

BRENT LARSON, P.E.
HAKANSON ANDERSON ASSOCIATES, INC.
DESIGN ENGINEER

LIC. NO. 45850 DATE 2/3/16

RONALD J. WAGNER, P.E.
APPROVED: CITY OF OTSEGO ENGINEER

DATE _____

DATE	REVISION

STA. TO STA.	GROSS LENGTH	NET LENGTH	PRESENT ADT (2016) / PROJECTED ADT (2036)	PROJECTED HC ADT	DESIGN ESAL	R VALUE	SIGMA N18/20	TON DESIGN	DESIGN SPEED	TRAFFIC LANES	SHOULDER WIDTH	PARKING LANES	FUNCTIONAL CLASSIFICATION
0+55 TO 18+72	1817 FT 0.344 MILES	1817 FT 0.344 MILES	755 3630	8.61% / 755	786,240	10	3.5%	10	45 MPH	2-12' 4-12'	VARIES 0-8.8'	0	MINOR COLLECTOR
6+40 TO 17+48	1125 FT 0.213 MILES	1048 FT 0.198 MILES	N/A N/A	N/A	N/A	10	3.5%	N/A	20 MPH	N/A	N/A	N/A	MULTI-USE TRAIL

R VALUE = 10 (FROM BRAUN INTERTEC GEOTECHNICAL REPORT DATED 11/18/15)

HORIZONTAL CURVE RADIUS BASED ON:
MnDOT ROAD DESIGN MANUAL TABLE 3-2.03A
NORMAL CROWN (-2.00% CROSS-SLOPE)
TRAIL:
MnDOT BIKEWAY FACILITY DESIGN MANUAL TABLE 5-3A FOR A 15-DEGREE LEAN ANGLE AND -2% CROSS SLOPE

CLEAR ZONE:
30 FT. MINIMUM
TRAIL CLEAR ZONE:
2 FT. MINIMUM
3 FT. TO POWER POLES, TREES, AND NEAR EDGE OF SIGNS

STOPPING SITE DISTANCE BASED ON:
3.5 FT. HEIGHT OF EYE
2.0 FT. HEIGHT OF OBJECT
0.13 COEFFICIENT OF FRICTION
TRAIL:
4.5 FT. HEIGHT OF EYE
0 FT. HEIGHT OF OBJECT
0.28 COEFFICIENT OF FRICTION

Hakanson Anderson
Civil Engineers and Land Surveyors
3601 Thurston Ave., Anoka, Minnesota 55303
763-427-5860 FAX 763-427-0520

Feb 02, 2016 - 10:13am
H:\proj_eng\PROJECTS\MUNICIPAL\OT3303\dwg\OT3303 TITLE.dwg

Ref. Note	ITEM NO.	MnDOT SPEC. REF.	DESCRIPTION	UNIT	ESTIMATED QUANTITY
STATEMENT OF ESTIMATED QUANTITIES					
	1	2021.501	Mobilization	LS	1
	2	2104.501	Remove Concrete Culvert	LF	106
	3	2104.501	Remove Concrete Curb and Gutter	LF	6
(3)	4	2104.505	Bituminous Pavement Removal	SY	6005
(1)	5	2104.507	Remove Concrete Structure	EA	1
	6	2104.509	Remove Sign	EA	4
	7	2104.513	Sawing Bit Pavement (Full Depth)	LF	131
(1)	8	2104.521	Salvage Concrete Pipe	LF	86
(5)	9	2105.501	Common Excavation (P)	CY	12788
(5)	10	2105.507	Subgrade Correction (EV)	CY	6788
(5)	11	2105.523	Common Borrow (LV)	CY	2181
(5)	12	2105.535	Salvaged Topsoil From Stockpile (LV)	CY	2103
(5)	13	2105.609	Select Granular Borrow (LV)	CY	2000
(16)	14	2211.501	Aggregate Base Class 2 Shoulder	TON	49
	15	2211.501	Aggregate Base Class 3 or 4	TON	12702
	16	2211.501	Aggregate Base Class 5 Mod	TON	4475
	17	2232.501	Mill Bituminous Surface (1.5")	SY	18
	18	2357.502	Bituminous Material For Tack Coat	GAL	437
(6)	19	2360.501	Type SP 12.5 Wearing Course Mixture (2,B) (Trail)	TON	222
	20	2360.501	Type SP 9.5 Wearing Course Mixture (3,C)	TON	1031
	21	2360.502	Type SP 12.5 Non Wear Course Mixture (3,C)	TON	1289
	22	2531.501	Concrete Curb & Gutter Design B618	LF	2446
	23	2531.507	6" Concrete Driveway Pavement	SY	66
	24	2531.618	Truncated Domes	SF	96
	25	2535.501	4" Bituminous Curb	LF	325
	26	2535.501	Bituminous Flume	EACH	2
(4)	27	2540.602	Install Mailbox Support	EA	2
	28	2563.601	Traffic Control	LS	1
(7)	29	2564.531	Sign Panels, Type C	SF	118.75
	30	2573.502	Silt Fence, Type MS	LF	5300
	31	2573.530	Storm Drain Inlet Protection	EACH	11
	32	2573.533	Sediment Control Log Type Straw	LF	24
	33	2573.535	Stabilized Construction Exit	LS	3
	34	2575.501	Seeding	ACRE	1.84
	35	2575.502	Seeding Mixture - 25-141	LBS	81
	36	2575.502	Seeding Mixture - 25-151	LBS	56
	37	2575.511	Mulch Material Type 1	TON	3.1
	38	2575.523	Erosion Control Blanket - Category 2	SY	1320
	39	2582.501	Pavement Message (Left Arrow) - Paint	EACH	26
	40	2582.502	12" Solid Line White - Paint	LF	276
	41	2582.502	24" Solid Line White - Paint	LF	54
	42	2582.502	24" Solid Line Yellow - Paint	LF	576
	43	2582.502	4" Broken Line White - Paint	LF	722
	44	2582.502	4" Double Solid Line Yellow - Paint	LF	12480
	45	2582.502	4" Solid Line White - Paint	LF	9594
	46	2582.502	Crosswalk Marking (3'X6' Blocks) White - Paint	SF	252
	47	2502.602	Connect To Existing Drainage Structure	LS	1
	48	2501.515	18" RC Pipe Apron	EACH	2
	49	2501.515	21" RC Pipe Apron	EACH	1
	50	2502.501	4" Precast Concrete Headwall	EACH	2
	51	2502.541	4" Perf PVC Pipe Drain	LF	633
(12)	52	2503.541	15" RC Pipe Sewer Design 3006 CL V (all depths)	LF	96
(12)	53	2503.541	18" RC Pipe Sewer Design 3006 CL V (all depths)	LF	368
(12)	54	2503.541	21" RC Pipe Sewer Design 3006 CL III (all depths)	LF	728
(9)(10)	55	2506.501	Construct Drainage Structure Design 48-4020	LF	38
(9)(10)	56	2506.501	Construct Drainage Structure Design 2' x 3'	LF	7.6
	57	2515.503	Articulated Interlocking Block Open Cell, Type A	SY	18.8
(2)	58		Connect To Existing Sanitary Manhole	LS	1
	59		4" HDPE DR11 AWWA C906 Forcemain Pipe	LF	1089
	60		Forcemain DIP Fittings	LBS	162
(8)	61		Testing Forcemain	LS	1
	62		Connect To Existing 16" Watermain	EA	1
	63		Salvage And Reinstall Hydrant, 6" Pipe And 6" Gate Valve	LS	1
	64		Hydrant	EA	2
	65		8" Watermain Ductile Iron Cl 52	LF	171
	66		16" Watermain Ductile Iron Cl 52	LF	1029
	67		6" Watermain Ductile Iron Cl 52	LF	23
	68		16" Butterfly Valve and Box	EA	2
	69		8" Gate Valve And Box	EA	1
	70		6" Gate Valve And Box	EA	2
	71		Watermain Fittings	LBS	3700
(8)	72		Testing Watermain	LS	1

STORM SEWER SCHEDULE

STRUCTURE NO. FLOWS FROM	STRUCTURE NO. FLOWS TO	STRUCTURE (13) STATION	STRUCTURE (13) OFFSET	DESIGN / PAY 2'x3' LIN FT	DESIGN / PAY 48-4020 LIN FT	NEENAH CASTING /FRAME	STEPS REQ'D	FLOWLINE OR TOP OF FRAME (11) ELEVATION	INVERT	ELEVATION	15 in RCP CL V LIN FT	18 in RCP CL V LIN FT	21 in RCP CL III LIN FT	PIPE SLOPE %	4:1 RCP APRON 15 in EA	4:1 RCP APRON 18 in EA	4:1 RCP APRON 21 in EA	CULVERT MARKER EACH
EX SKMR	CBMH 109	7+20	25.2	existing structure				947.65		944.62		8		17.19				
CBMH 109	CBMH 108	7+12	22.3		3.72	R3067-V	YES	946.89	E	943.17		45		0.22				
									N	943.17								
CBMH 108	CBMH 106	712	22.3		3.82	R3067-V	YES	946.89	S	943.07		183		0.24				
									E	943.07								
CB 107	CBMH 106	8+95	22.3	3.69		R3067-V	YES	949.69		946.00	45			0.49				
CBMH 106	CBMH 105	8+95	22.3		7.07	R3067-V	YES	949.69	W	942.63			345	0.18				
									S	945.78								
									E	942.62								
CBMH 105	CBMH 103	12+49	27.2		8.83	R3067-V	YES	950.86	W	941.93			238					
									E	941.98								
CB 104	CBMH 103	14+87	20.8	3.95		R3067-V	YES	947.10	N	943.15	51			0.39				
CBMH 103	FES 3	14+87	27.2		5.67	R3067-V	YES	946.97	W	941.30			151	0.54				
									NE	941.30								
									S	942.95								
FES 3	DITCH	16+11	124.4							940.48							1	
FES 2	CBMH 102	16+63	38.1							943.00		27		6.97		1		
CBMH 102	CBMH 101	16+91	20.8		3.62	R3067-V	YES	944.96	N	941.14		51		0.27				
									SW	941.14								
CBMH 101	FES 1	16+91	27.2		3.83	R3067-V	YES	944.83	N	941.00		66		0.83				
									S	941.00								
FES 1	DITCH	16+91	101.1							940.45						1		
80TH STREET TOTALS				7.64	36.81						96 (12)	380 (12)	734 (12)		0	2	1	0

CONSTRUCTION AND SOILS NOTES

A. TOP OF THE GRADING SUBGRADE IS DEFINED AS THE BOTTOM OF THE CLASS 3/CLASS 4 AGGREGATE BASE. ALL UNSTABLE MATERIAL SUCH AS TOPSOIL, SILTS, ORGANIC MATERIALS, MUCK, ETC. ENCOUNTERED DURING EXCAVATION WHICH IS NOT ACCOUNTED FOR IN THE ESTIMATED QUANTITIES WILL BE PAID AS "SUBGRADE CORRECTION".

B. STRIP ALL INPLACE TOPSOIL AND SLOPE DRESSING IN AREAS TO BE DISTURBED BY CONSTRUCTION AND REUSE AS SLOPE DRESSING. IN AREAS OF STREET, SHOULDER, AND INTERSECTION CONSTRUCTION, THE EXPOSED SUITABLE SOILS SHALL BE SURFACE COMPACTED TO A MINIMUM 95% MAXIMUM STANDARD PROCTOR DRY DENSITY, ASTM D1557 UNLESS WITHIN THE TOP 3 FT WHERE THEY SHALL BE COMPACTED TO 100%.

C. UNLESS OTHERWISE RECOMMENDED IN THESE PLANS, THE GRADING SUBGRADE SHALL BE CONSTRUCTED OF SUITABLE GRADING MATERIAL. THE FILL SHALL BE PLACED IN 8" TO 10" LOOSE LIFTS, AND COMPACTED TO A MINIMUM 95% MAXIMUM STANDARD PROCTOR DRY DENSITY, ASTM D1557 UNLESS WITHIN THE TOP 3 FT WHERE THEY SHALL BE COMPACTED TO 100%.

D. IN ANY PAVEMENT WIDENING THE CONTRACTOR SHALL STRIVE TO SUBSTANTIALLY MATCH BACKFILL MATERIAL WITH IN PLACE SOILS TO FORESTALL ABRUPT FROST DIFFERENTIAL. GRANULAR FILL SHALL NOT BE PLACED BESIDE NON GRANULAR SOILS AND VICE VERSA.

E. WHEN PLACING NEW PAVEMENT ADJACENT TO INPLACE PAVEMENT CUT VERTICALLY TO THE BOTTOM OF INPLACE SURFACING OR TOP OF GRADING SUBGRADE WHICHEVER IS DEEPER AT A 1(V):2(H) TO THE BOTTOM OF EXCAVATION.

F. PROVIDE A SAW CUT WHEN PLACING NEW PAVEMENT ADJACENT TO INPLACE PAVEMENT AND AT TERMINI OF CONSTRUCTION TO ENSURE A UNIFORM JOINT. MILL ALONG JOINTS, MINIMUM 18" WIDE, TO STAGGER JOINTS PRIOR TO PLACING WEAR COURSE.

G. BITUMINOUS AND CONCRETE ITEMS DISTURBED BY CONSTRUCTION SHALL BECOME THE PROPERTY OF THE CONTRACTOR AND SHALL BE DISPOSED IN ACCORDANCE WITH Mn/DOT SPEC. 2104.3.

H. USE TACK COAT BETWEEN ALL BITUMINOUS MIXTURES. THE BITUMINOUS TACKCOAT MATERIAL SHALL BE APPLIED AT A UNIFORM RATE OF 0.04 GAL/SY TO 0.06 GAL/SY BETWEEN BITUMINOUS LAYERS. THE APPLICATION RATES ARE FOR UNDILUTED EMULSIONS (AS SUPPLIED FROM THE REFINERY) OR MC AND RC LIQUID ASPHALTS. THE ASPHALT EMULSION MAY BE FURTHER DILUTED IN THE FIELD IN ACCORDANCE WITH SPEC. 2357.

I. THE BITUMINOUS MIXTURES SHALL MEET THE REQUIREMENTS OF SPECIFICATIONS 2360 AND 3139.

J. UTILITY COMPANIES WILL RELOCATE THEIR FACILITIES CONCURRENTLY WITH THE CONSTRUCTION OPERATIONS UNDER THIS CONTRACT. CONTRACTOR SHALL SCHEDULE CONSTRUCTION IN COOPERATION WITH UTILITY RELOCATION. THE UTILITY COMPANIES MAY REQUIRE NEW CONDUIT CROSSINGS. THE UTILITY COMPANIES WILL PROVIDE THE CONDUIT. THE CONTRACTOR SHALL INSTALL THE CONDUIT. THIS WORK SHALL BE INCIDENTAL.

K. EROSION CONTROL SHALL CONFORM TO THE Mn/DOT EROSION CONTROL HANDBOOK.

L. GEOTEXTILE FABRIC SHALL BE PLACED UNDER ARTICULATED BLOCK. GEOTEXTILE FABRIC SHALL BE INCLUDED IN THE COST OF PAY ITEM – 2515.

M. CATEGORY 2 EROSION CONTROL BLANKET SHALL BE INSTALLED AS SHOWN ON THE PLANS AND IN AREAS OF POSSIBLE EROSION AS DIRECTED BY THE ENGINEER.

N. THE STREET BITUMINOUS WEAR COURSE SHALL BE PLACED IN 2017 AFTER 1 FREEZE–THAW CYCLE. TEMPORARY INTERIM STRIPING WILL BE REQUIRED AND SHALL BE PAID PER UNIT PRICE FOR STRIPING.

REFERENCE NOTES:

(1) FRAME AND CASTING SHALL BE SALVAGED (FROM STRUCTURE). ALL SALVAGED MATERIAL SHALL BE GIVEN TO THE CITY OF OTSEGO (CONTACT KEVIN LAMSON, CITY OPERATIONS MANAGER).

(2) CONNECTION TO EXISTING SANITARY MANHOLE SHALL INCLUDE ALL MATERIAL AND LABOR TO CORE DRILL A NEW HOLE AND INSTALL A RUBBER BOOT AND REWORK THE INVERT, ETC IN ACCORDANCE WITH STANDARD DETAIL 301 ON SHEET 6.

(3) REMOVAL OF BITUMINOUS FLUMES AND BITUMINOUS CURB SHALL BE INCLUDED IN ITEM 2104–REMOVE BITUMINOUS PAVEMENT

(4) WHERE POSSIBLE ALL EXISTING MAILBOXES SHALL BE SALVAGED AND REUSED ON NEW MAILBOX SUPPORTS. WHERE EXISTING MAILBOX DOES NOT MEET CURRENT US POSTAL CODE OR DOES NOT EXIST A NEW MAILBOX SHALL BE PROVIDED. IF NECESSARY THE CONTRACTOR SHALL FURNISH, INSTALL, AND MAINTAIN TEMPORARY MAILBOX(S) FOR ALL PROPERTIES OUTSIDE OF THE CONSTRUCTION LIMITS AT A LOCATION TO BE DETERMINED AT THE PRE–CONSTRUCTION MEETING. ALL COSTS FOR SALVAGING MAILBOX(S), PROVIDING NEW MAILBOX(S), AND TEMPORARY MAILBOX(S) SHALL BE INCLUDED IN ITEM 2540–INSTALL MAILBOX SUPPORT.

(5) SEE EARTHWORK TABULATION ON SHEET 4.

(6) FOR BITUMINOUS TRAIL AND BITUMINOUS DRIVEWAYS

(7) ALL SIGN PANELS SHALL BE PAID AS TYPE C.

(8) ALL TESTING SHALL BE PER CITY OF OTSEGO ENGINEERING MANUAL, 2014 CEAM, AND MnDOT 2014 SPECIFICATIONS.

(9) ALL CASTINGS SHALL BE INCLUDED IN THE COST OF ITEMS 2506 – CONSTRUCT DRAINAGE STRUCTURE. THE DRAINAGE STRUCTURE AND CASTING SHALL BE PER STORM SEWER SCHEDULE SHOWN.

(10) ALL COST FOR ADJUSTING CASTINGS TO FINISHED GRADES SHALL BE INCLUDED IN ITEMS 2506 – CONSTRUCT DRAINAGE STRUCTURE.

(11) FLOWLINE ELEVATIONS ARE BASED ON THE NORMAL GUTTER GRADES AT CATCH BASINS MINUS 0.17'

(12) IF APPLICABLE, PIPE LENGTHS SHOWN INCLUDE THE LENGTH OF APRON. PIPE PAY LENGTHS SHALL BE FOR ACTUAL LENGTH OF PIPE USED AND APRONS SHALL BE PAID PER EACH.

(13) STATION AND OFFSET ARE MEASURED TO:
- CENTER OF STRUCTURE FACE OF CURB OR CENTER OF STRUCTURE IF NOT IN CURB
- END OF RC APRON

(14) ALL CASTINGS AND CONCRETE ADJUSTING RINGS SHALL BE ENCASED IN CONCRETE PER MN/DOT STANDARD PLATE 4026.

(15) USE CLASS C BEDDING FOR ALL STORM SEWER. PIPE BEDDING SHALL BE INCLUDED IN PAY ITEMS 2501 & 2503.

(16) ALL GRAVEL DRIVEWAYS SHALL BE PAID AS AGGREGATE BASE CLASS 2 SHOULDER. ALL MATERIAL SHALL MATCH THE EXISTING DRIVEWAY'S MATERIAL AND IT SHALL BE THE CONTRACTOR'S RESPONSIBILITY TO DETERMINE THE TYPE OF EXISTING MATERIAL.

BASIS OF ESTIMATED QUANTITIES	
AGGREGATE BASE CLASS 3 OR CLASS 4	125 lbs/ft³
SHOULDER BASE AGGREGATE, CLASS 2	135 lbs/ft³
AGGREGATE BASE CLASS 5 MOD	135 lbs/ft³
NON WEARING BITUMINOUS COURSE MIXTURE	145 lbs/ft³
WEARING COURSE BITUMINOUS MIXTURE	145 lbs/ft³
BITUMINOUS MATERIAL FOR TACK COAT	0.05 Gal/yd²
SEED MIXTURE 25-142	45 lbs/acre
SEED MIXTURE 25-151	120 lbs/acre
MULCH MATERIAL TYPE 1	2 Ton/ac
FERTILIZER TYPE 1, ANALYSIS 22-10-10	500 lbs/acre

DATE	REVISION

I hereby certify that this plan, specification, or report was prepared by me or under my direct supervision and that I am a duly Licensed Professional Engineer under the laws of the State of Minnesota.

BRENT LARSON, P.E.

Date 2/3/2015 Lic. No. 45850

BML
BML
RJW

Hakanson Anderson
Civil Engineers and Land Surveyors
3601 Thurston Ave., Anoka, Minnesota 55303
763-427-5860 FAX 763-427-0520
www.hakanson-anderson.com

CITY OF Otsego MINNESOTA

ESTIMATED QUANTITIES AND STORM SEWER SCHEDULE
80TH STREET NE
CITY OF OTSEGO, MINNESOTA

OT393

Feb 03, 2015 - 12:17pm K:\cad_mto\PROJECTS\MUNICIPAL\OT393\dwg\OT393 QUANTITIES_DETAILS.dwg

LEGEND

SURVEY AND RIGHT-OF-WAY
- IRON MONUMENT SET
- IRON MONUMENT FOUND
- CAST IRON MONUMENT
- TELEPHONE MANHOLE
- UTILITY POLE
- UTILITY POLE GUYWIRE
- SOIL BORING
- SIGN
- LIGHT
- SIGNAL POLE
- TELEPHONE PEDESTAL
- ELECTRIC PEDESTAL
- CABLE TV BOX
- MAIL BOX
- RIGHT-OF-WAY LINE
- PROPERTY LINE
- DRAINAGE AND UTILITY EASEMENT
- DELINEATED WETLAND
- 900 EXISTING CONTOUR
- x 831.5 EXISTING SPOT ELEVATION
- CONIFEROUS TREE
- DECIDUOUS TREE
- SHRUB
- TREE LINE
- FENCE
- RETAINING WALL
- RIP RAP

MISCELLANEOUS UTILITIES
- P-SVR UNDERGROUND ELECTRIC
- P-OH OVERHEAD ELECTRIC
- T-SVR UNDERGROUND TELEPHONE
- T-OH OVERHEAD TELEPHONE
- G GAS MAIN
- FO-SVR FIBER OPTIC
- TV-SVR UNDERGROUND CABLE TELEVISION
- TV-OH OVERHEAD CABLE TELEVISION
- U-OH OVERHEAD UTILITIES

STREETS
- CONCRETE PAVEMENT
- CONCRETE CURB & GUTTER
- BITUMINOUS
- GRAVEL
- GUARDRAIL
- PROPOSED CONCRETE CURB & GUTTER
- PROPOSED DRAINTILE IN STREET
- PROPOSED TYPE III BARRICADE
- PROPOSED GUARDRAIL
- PROPOSED RETAINING WALL
- PROPOSED SIGN

STORM SEWER
- STORM SEWER
- CATCH BASIN
- STORM SEWER MANHOLE
- MEDIAN DRAIN/YARD INLET
- STORM SEWER BULKHEAD
- FLARED END SECTION
- PROPOSED STORM SEWER
- PROPOSED CATCH BASIN
- PROPOSED STORM SEWER MANHOLE
- PROPOSED MEDIAN DRAIN/YARD INLET
- PROPOSED STORM SEWER BULKHEAD
- PROPOSED FLARED END SECTION

SANITARY SEWER
- SANITARY SEWER
- FORCEMAIN
- SANITARY SEWER MANHOLE
- SANITARY SEWER BULKHEAD
- SANITARY SEWER CLEANOUT
- PROPOSED SANITARY SEWER
- PROPOSED FORCEMAIN
- PROPOSED SANITARY SEWER MANHOLE
- PROPOSED SANITARY SEWER BULKHEAD
- PROPOSED SANITARY SEWER CLEANOUT

WATERMAIN
- WATERMAIN
- WATERMAIN MANHOLE
- HYDRANT
- WATER VALVE
- WATERMAIN BEND
- WATERMAIN TEE
- WATER SHUTOFF
- PROPOSED WATERMAIN
- PROPOSED HYDRANT
- PROPOSED WATER VALVE
- PROPOSED WATERMAIN BEND
- PROPOSED WATERMAIN TEE
- WATER SHUTOFF

GRADING
- 500 PROPOSED INDEX CONTOUR
- 798 PROPOSED CONTOUR
- 877.0 PROPOSED SPOT ELEVATION
- 841.00 PROPOSED CENTERLINE SPOT ELEVATION
- 1.2% PROPOSED DRAINAGE FLOW

PUBLIC UTILITIES CONTACT TABULATION		
UTILITY OWNER	CONTACT NAME	PHONE
WRIGHT-HENNEPIN	WAYNE BAUERNSCHMITT	763-477-3095
CENTERPOINTE ENERGY	ERIC YANG	612-321-5334
CHARTER COMMUNICATIONS	CHRIS MORAN	320-980-3669
CENTURYLINK	BILL BYERS	651-829-5383
ARVIG	PAT LYNCH	Pat.Lynch@arvig.com
CITY OF OTSEGO STREETS DEPT	KEVIN LAMSON	763-441-4414
CITY OF OTSEGO WATER AND SEWER DEPT	KURT NEIDERMEIER	763-458-4219

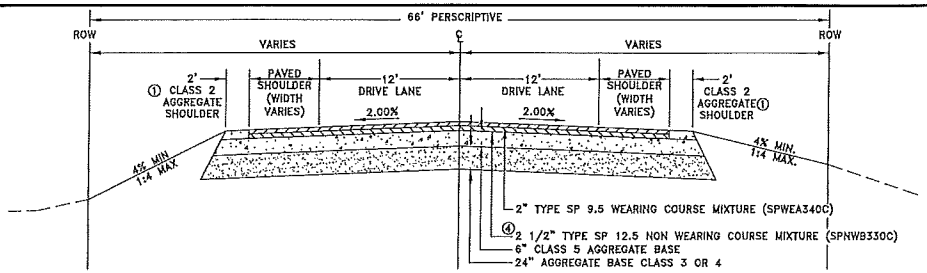

TYPICAL SECTION
1/3 STATION 0+54 TO 5+48, 17+46 TO 18+71

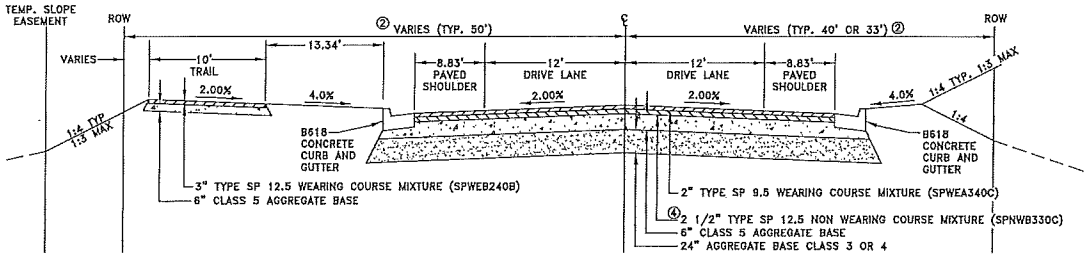

TYPICAL SECTION
2/3 STATION 5+48 TO 11+34

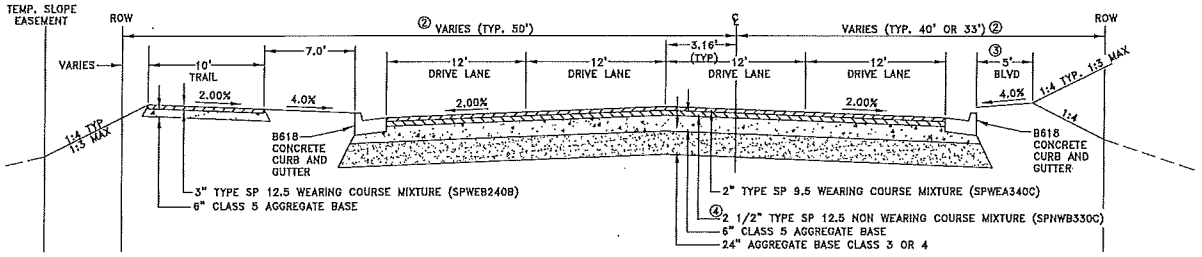

TYPICAL SECTION
3/3 STATION 11+34 TO 17+46

REFERENCE NOTES:
① FROM STATION 0+54 TO 2+18 A 4" BITUMINOUS CURB REPLACES THE 2' GRAVEL SHOULDER.
② SOUTH SIDE OF 80TH STREET HAS 40' PLATTED ROW FROM STA. 6+60 TO 10+08 AND 33' PERSCRIPTIVE FROM 10+08 TO EAST END OF CONSTRUCTION (MEASURED FROM SECTION LINE). ROAD IS NOT CENTERED IN RIGHT-OF-WAY.
③ BOULEVARD WIDTH VARIES SO THAT 1:4 SLOPE STAYS WITHIN RIGHT OF WAY BEWTEEN STATION 11+50 TO 14+50.
④ WEAR COURSE NOT TO BE INSTALLED UNTIL 2017, AFTER ONE FREEZE THAW CYCLE.

DATE	REVISION

I hereby certify that this plan, specification, or report was prepared by me or under my direct supervision and that I am a duly Licensed Professional Engineer under the laws of the State of Minnesota.

BRENT BARGUS, P.E.
Date 2/3/2015 Lic. No. 45850

DESIGNED BY: BML
DRAWN BY: BML
CHECKED BY: RJW

Hakanson Anderson
Civil Engineers and Land Surveyors
3601 Thurston Ave., Anoka, Minnesota 55303
763-427-5860 FAX 763-427-0520
www.hakanson-anderson.com

CITY OF Otsego MINNESOTA

TYPICAL SECTIONS AND LEGEND

80TH STREET NE
CITY OF OTSEGO, MINNESOTA

SHEET 3 OF 28 SHEETS

OT393

Feb 02, 2016 - 2:18pm
N:\civil_eng\PROJECTS\MUNICIPAL\OT393\dwg\OT393 GRANTTIES_DETAILS.dwg

EARTHWORK TABLE

STATION	VOLUMES (Cubic Yards) TopSoil CUT	TopSoil FILL	Common Ex CUT	Common Ex FILL	CUMULATIVE VOLUMES (Cubic Yards) TopSoil CUT	TopSoil FILL	Common Ex CUT	Common Ex FILL
80th STREET								
0+50					0	0	0	0
1+00	8.21	0.00	102.43	16.19	8.21	0.00	102.43	16.19
1+50	24.20	0.00	203.43	31.31	32.41	0.00	305.86	47.50
1+83	21.66	0.00	133.39	19.63	54.07	0.00	439.24	67.13
2+00	11.69	0.00	70.23	9.61	65.76	0.00	509.47	76.74
2+25	17.94	0.00	108.80	13.41	83.70	0.00	618.28	90.15
2+50	16.77	0.00	103.75	11.23	100.47	0.00	722.03	101.38
3+00	38.06	0.00	245.33	24.01	138.54	0.00	967.36	125.39
3+50	41.39	0.00	281.36	29.87	179.92	0.00	1248.72	155.26
4+00	44.73	0.00	302.02	31.61	224.66	0.00	1550.75	186.87
4+50	46.31	0.00	297.50	29.03	270.96	0.00	1848.25	215.90
5+00	44.92	0.00	272.97	32.51	315.88	0.00	2121.22	248.42
5+50	45.00	0.00	242.58	78.45	361.88	0.00	2363.80	326.87
6+00	38.75	0.00	336.70	72.78	400.63	0.00	2700.50	399.65
6+50	64.35	0.00	359.95	160.15	464.98	0.00	3060.45	559.80
7+00	99.18	0.00	300.72	287.77	564.17	0.00	3361.17	847.57
7+50	99.22	0.00	351.58	266.68	663.39	0.00	3712.75	1114.25
8+00	99.38	0.00	367.74	259.86	762.77	0.00	4080.49	1374.11
8+50	99.00	0.00	331.01	267.64	861.77	0.00	4411.51	1641.75
9+00	98.82	0.00	235.50	273.48	960.59	0.00	4647.01	1915.23
9+50	98.88	0.00	227.57	277.59	1059.47	0.00	4914.58	2192.82
9+94	86.11	0.00	166.83	231.93	1145.58	0.00	5081.45	2424.75
10+00	12.69	0.00	22.56	32.33	1158.26	0.00	5104.01	2457.08
10+50	98.37	0.00	171.09	231.01	1256.63	0.00	5275.01	2688.09
11+00	97.66	0.00	171.29	186.83	1354.29	0.00	5446.30	2874.92
11+50	99.41	0.00	205.21	159.10	1453.70	0.00	5651.51	3034.02
12+00	103.37	0.00	249.94	98.06	1557.07	0.00	5901.45	3132.08
12+11	24.55	0.00	56.09	8.46	1581.62	0.00	5957.45	3140.54
12+50	85.26	0.00	211.25	88.79	1671.88	0.00	6168.70	3229.33
13+00	100.56	0.00	288.55	194.07	1772.44	0.00	6457.25	3423.41
13+22	44.13	0.00	135.57	86.47	1816.57	0.00	6592.82	3509.88
13+50	56.13	0.00	177.83	102.84	1872.71	0.00	6770.65	3612.72
14+00	98.40	0.00	333.69	159.14	1971.11	0.00	7104.33	3771.86
14+50	95.81	0.00	353.99	148.89	2066.92	0.00	7457.32	3920.76
15+00	97.28	0.00	376.21	160.39	2164.20	0.00	7833.53	4081.14
15+50	61.97	0.00	239.99	67.42	2226.17	0.00	8073.53	4150.56
15+50	42.40	0.00	162.90	32.30	2268.57	0.00	8236.43	4182.86
16+00	96.23	0.00	402.71	142.50	2362.80	0.00	8639.14	4325.37
16+50	97.52	0.00	399.85	180.50	2460.33	0.00	9039.99	4505.87
17+00	98.69	0.00	387.96	186.22	2559.02	0.00	9427.95	4692.09
17+09	16.67	0.00	67.39	34.14	2575.68	0.00	9495.34	4726.23
17+50	44.71	0.00	253.23	90.67	2620.40	0.00	9748.57	4816.90
18+00	19.36	0.00	213.44	26.80	2639.75	0.00	9962.02	4843.70
18+50	17.47	0.00	176.56	23.28	2657.22	0.00	10138.57	4866.98
19+00	8.79	0.00	81.42	10.58	2665.01	0.00	10219.99	4877.56
				TOTAL	2,666	0	10,220	4,878
LIFT STATION ACCESS ROAD								
0+00					0	0	0	0
0+50	0.00	0.00	0.00	0.00	0.00	0.00	0.00	0.00
1+00	15.07	0.00	0.00	11.66	15.07	0.00	0.00	11.66
1+50	30.74	0.00	0.00	30.35	45.81	0.00	0.00	42.01
2+00	31.24	0.00	0.00	36.43	77.05	0.00	0.00	78.44
2+50	30.71	0.00	0.00	31.04	107.75	0.00	0.00	109.48
3+00	30.17	0.00	0.00	25.61	137.92	0.00	0.00	135.09
3+50	29.81	0.00	0.00	22.24	167.73	0.00	0.00	157.33
4+00	29.59	0.00	0.00	20.21	197.32	0.00	0.00	177.54
4+50	29.97	0.00	0.00	23.63	227.29	0.00	0.00	201.16
5+00	30.40	0.00	0.00	27.75	257.69	0.00	0.00	228.91
5+50	30.01	0.00	0.00	24.26	287.70	0.00	0.00	253.17
6+00	29.13	0.00	0.00	16.48	316.83	0.00	0.00	269.65
6+50	28.88	0.00	0.00	14.42	345.72	0.00	0.00	284.07
7+00	29.34	0.00	0.00	19.06	375.06	0.00	0.00	303.14
7+50	29.09	0.00	0.00	18.91	404.15	0.00	0.00	322.05
8+00	29.46	0.00	0.00	21.71	433.61	0.00	0.00	343.76
8+50	33.44	0.00	0.00	68.18	467.05	0.00	0.00	411.94
8+75	18.25	0.00	0.00	54.12	485.30	0.00	0.00	466.05
				TOTAL	485	0	0	466
TOTAL					3,151	0	10,220	5,344

SUMMARY OF EARTHWORK BALANCE

	SUMMARY OF EARTH BALANCE		
	SUMMARY OF COMMON EXCAVATION		Quantity
	TOPSOIL STRIPPING		3,151 C.Y.
	COMMON EXCAVATION (CUT)		10,220 C.Y.
	BITUMINOUS REMOVAL (SEPARATE BID ITEM)		-533 C.Y.
ITEM 9	TOTAL COMMON EXCAVATION		12,783 C.Y.
	SUMMARY OF SUBGRADE CORRECTION		
	SUBGRADE CORRECTION (CUT)		6,788 C.Y.
ITEM 10	TOTAL SUBGRADE CORRECTION		6,788 C.Y.
	TOTAL EXCAVATION		19,575 C.Y.
	SUMMARY OF FILL		
	COMMON EXCAVATION (FILL)		5,344 C.Y.
	SUBGRADE CORRECTION (FILL)		6,788 C.Y.
	TOTAL FILL QUANTITY		12,131 C.Y.
	TOTAL EARTH BALANCE SUMMARY		
	TOPSOIL FILL QUANTITY (6" THICK)		1,502 C.Y.
	COMPACTION FACTOR	x	1.40
② ITEM 12	REQUIRED TOPSOIL FILL		2,103 C.Y.
	NET TOPSOIL EXCAVATION		3,151 C.Y.
	EXCESS TOPSOIL		1,048 C.Y.
	NET FILL QUANTITY		12,131 C.Y.
	MINUS TOPSOIL FILL		1,502 C.Y.
			10,629 C.Y.
	COMPACTION FACTOR	x	1.30
	REQUIRED FILL (WITHOUT TOPSOIL)		13,818 C.Y.
	TOTAL COMMON EXCAVATION		19,575 C.Y.
	MINUS SUBGRADE CORRECTION (CUT)	-	6,788 C.Y.
	MINUS TOPSOIL EXCAVATION	-	3,151 C.Y.
	USABLE COMMON EXCAVATION		9,637 C.Y.
	REQUIRED FILL (WITHOUT TOPSOIL)	-	13,818 C.Y.
④ ITEM 11	COMMON BORROW REQUIRED		4,181 C.Y.

REFERENCE NOTES:

① FILL SHALL CONSIST OF SUITABLE GRADING MATERIAL. PLACEMENT AND COMPACTION OF ALL FILL SHALL BE INCLUDED IN PAY ITEM 2105 – COMMON EXCAVATION

② TOPSOIL SHALL BE USED TO DRESS ALL DITCH SLOPES AND PONDS. A MINIMUM OF 12 INCHES OF TOPSOIL SHALL BE PLACED. ALL WORK ASSOCIATED WITH PLACEMENT OF MATERIAL IS INCLUDED IN BID ITEM 2105.

③ EXISTING CLASS 5 SHALL BE REMOVED AND SALVAGED FOR USE AS PIPE BEDDING. ANY EXCESS CLASS 5 SHALL BE MIXED WITH EXISTING CLAY MATERIAL AND RE-USED AS FILL.

④ COMMON BORROW SHALL CONSIST OF MATERIAL SIMILAR TO THOSE EXISTING MATERIALS ON SITE. THIS QUANTITY HAS BEEN SPLIT INTO TWO SEPARATE ITEMS, COMMON BORROW AND SELECT GRANULAR BORROW. THE SELECT GRANULAR BORROW SHALL BE USED ONLY IF RECOMMENDED BY THE GEOTECHNICAL ENGINEER IN LIEU OF COMMON BORROW.

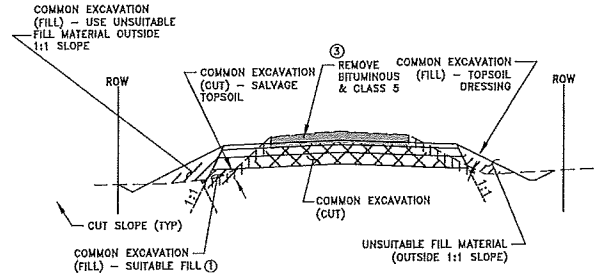

1/7 TYPICAL EXCAVATION SECTION
80TH STREET (STA 0+50 TO 5+50)
N.T.S.

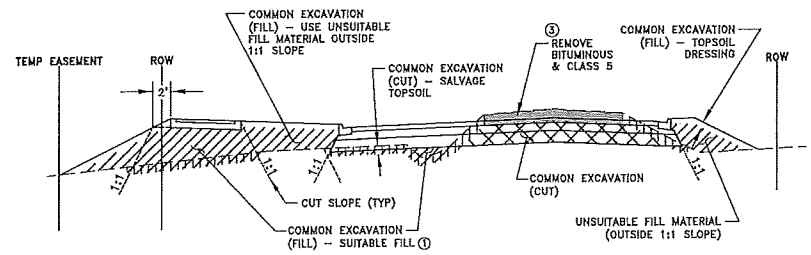

2/7 TYPICAL EXCAVATION SECTION
80TH STREET (STA 5+50 TO 18+75)
N.T.S.

LEGEND

- 9" RECLAIM AND SALVAGE
- 6" TOPSOIL DRESSING
- 12" TOPSOIL SALVAGE
- COMMON EXCAVATION (CUT)
- COMMON EXCAVATION (FILL)

NOTES:

1. FILL MATERIAL SHALL BE SUITABLE GRADING MATERIAL. SUITABLE GRADING MATERIAL ON THIS PROJECT SHALL CONSIST OF ALL SOILS ENCOUNTERED WITH THE EXCEPTION OF TOPSOIL, SILTS, DEBRIS, ORGANIC MATERIAL, AND OTHER UNSTABLE MATERIAL.
2. CONTRACTOR SHALL PROVIDE A SAFE CUT SLOPE PER OSHA REQUIREMENTS.
3. WHERE A 4:1 SLOPE WILL NOT FIT WITHIN THE ROW AND NO TEMPORARY SLOPE EASEMENT EXISTS, A 3:1 SLOPE SHALL BE USED TO MATCH INTO EXISTING GROUND.
4. REMOVE EXISTING GRAVEL AS NEEDED TO OBTAIN FULL SECTION OF NEW ROAD. ALSO REMOVE GRAVEL AS NEEDED TO OBTAIN MIN. DEPTH OF 12" TOPSOIL DRESSING.
5. ANY EXCESS MATERIAL SHALL BECOME THE PROPERTY OF THE CONTRACTOR AND SHALL PROPERTLY DISPOSED OF OUTSIDE OF THE RIGHT OF WAY.

DATE	REVISION

I hereby certify that this plan, specification, or report was prepared by me or under my direct supervision and that I am a duly Licensed Professional Engineer under the laws of the State of Minnesota.

BRENT CARSON, P.E.
Date 2/3/2015 Lic. No. 45850

DESIGNED BY: BML
DRAWN BY: BML
CHECKED BY: RJW

Hakanson Anderson
Civil Engineers and Land Surveyors
3601 Thurston Ave., Anoka, Minnesota 55303
763-427-5860 FAX 763-427-0520
www.hakanson-anderson.com

CITY OF Otsego MINNESOTA

EARTHWORK SUMMARY, TABULATION AND DETAILS
80TH STREET NE
CITY OF OTSEGO, MINNESOTA

SHEET 4 OF 28 SHEETS

OT393

Feb 02, 2015 – 2:15pm
N:\Land Projects\OTSEGO\MUNICIPAL\OT393\dwg\OT393 QUANTITIES_DETAILS.dwg

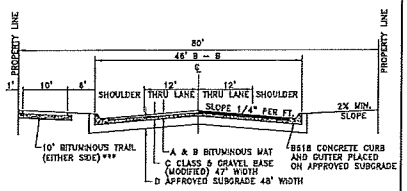

LEGEND					
AASHTO	R VALUE SIGMA N18	BITUMINOUS SURFACE		AGGREGATE BASE	
SUBGRADE SOIL CLASS		WEAR 2360 LWW2360C18	NON-WEAR 2360 LNW2360C18	CLASS 5 OR 6 3138 C*	CLASS 3 OR 4 3138 C*
A-3	(R-70 ≤ R≤80)	** 2"	** 2 1/2"	** 5"	–
A-4	(R-55 ≤ R≤70)	2"	2 1/2"	5"	–
A-5	(R-40 ≤ R≤55)	2"	2 1/2"	5"	12"
A-7	(R-18 ≤ R≤40)	2"	2 1/2"	5"	18"
	(R-9 ≤ R≤20)	2"	2 1/2"	6"	24"

* SUBJECT TO REVIEW BY QUALIFIED SOILS ENGINEER
** MINIMUM ALLOWABLE DESIGN THICKNESS
***SEE STANDARD DETAIL 707

NOTES:
R VALUE IS A MEASURE OF EMBANKMENT SOIL RESISTANCE STRENGTH AS DETERMINED BY THE HVEEM STABILOMETER METHOD

SIGMA N18 VALUE IS THE CUMULATIVE DAMAGE EFFECT OF VEHICLES DURING THE DESIGN LIFE OF A FLEXIBLE PAVEMENT.

MSA COLLECTOR URBAN STREET SECTION – 10 TON

NO SCALE

APPROVED
REVISED 8-18-15
CITY OF Otsego MINNESOTA
STANDARD PLATE NO. 103

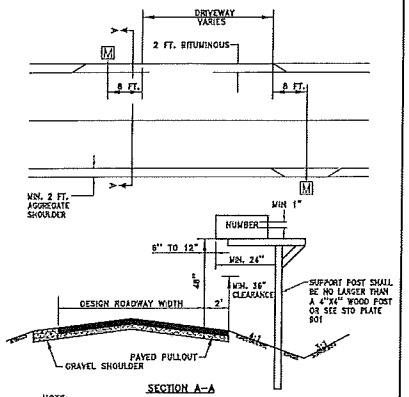

SECTION A–A

NOTE:
1. SUPPORT POST SHALL BE NO LARGER THAN A 4"X4" WOOD POST OR 2" DIA. STEEL/ALUMINUM POST. SUPPORT POSTS SHALL BURIED 24" DEEP.
2. MAILBOXES AND NEWS RECEPTACLES SHALL BE POSTMASTER APPROVED.
3. A MINIMUM 36" CLEARANCE FROM THE GROUND MUST BE MAINTAINED FOR SNOW REMOVAL. CITY WILL NOT REPLACE DAMAGES CAUSED BY SNOW REMOVAL IF 36" OF CLEARANCE IS NOT PROVIDED.
4. FOR USE ALONG LOW SPEED ROUTES (35 MPH OR LESS, SEE STD PLATE 901 FOR HIGHER SPEED ROUTES).

RURAL MAILBOX (LOW SPEED)

NO SCALE

APPROVED
REVISED 8-18-15
CITY OF Otsego MINNESOTA
STANDARD PLATE NO. 105

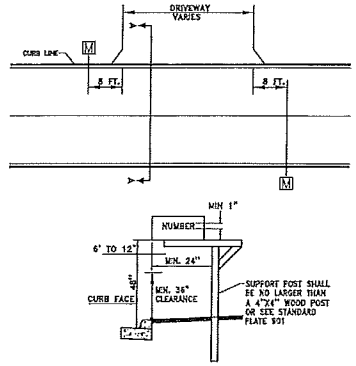

SECTION A–A

NOTE:
1. SUPPORT POST SHALL BE NO LARGER THAN A 4"X4" WOOD POST OR 2" DIA. STEEL/ALUMINUM POST. SUPPORT POSTS SHALL BURIED 24" DEEP.
2. MAILBOXES AND NEWS RECEPTACLES SHALL BE POSTMASTER APPROVED.
3. A MINIMUM 36" CLEARANCE FROM THE GROUND MUST BE MAINTAINED FOR SNOW REMOVAL. CITY WILL NOT REPLACE DAMAGES CAUSED BY SNOW REMOVAL IF 36" OF CLEARANCE IS NOT PROVIDED.
4. ALL MAILBOXES SHALL BE PLACED IN CLUSTERS IN NEW DEVELOPMENTS.
5. NO MAILBOXES SHALL BE PLACED IN CUL-DE-SACS.

URBAN MAIL BOX LOCATION

NO SCALE

APPROVED
REVISED 8-18-15
CITY OF Otsego MINNESOTA
STANDARD PLATE NO. 106

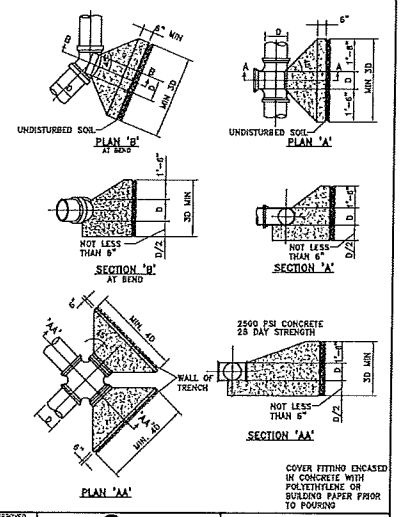

APPROVED
REVISED
CITY OF Otsego MINNESOTA
STANDARD PLATE NO. 202

PIPE SIZE	TEE or PLUG	CROSS W/ 2 PLUGS (Le. 90° BEND)	1/8 BEND (45° BEND) AND 1/16 BEND (22.5°)
6"	0.22 CuYds	0.15 CuYds	0.05 CuYds
8"	0.27 CuYds	0.29 CuYds	0.08 CuYds
10"	0.32 CuYds	0.48 CuYds	0.14 CuYds
12"	0.37 CuYds	0.73 CuYds	0.21 CuYds
16"	0.53 CuYds	1.73 CuYds	0.49 CuYds
20"	0.82 CuYds	3.38 CuYds	0.95 CuYds
24"	1.34 CuYds	5.77 CuYds	1.63 CuYds

NOTES:
1. COVER FITTINGS ENCASED IN CONCRETE WITH POLYETHYLENE OR BUILDING PAPER PRIOR TO POURING.
2. CONCRETE BLOCKING SHALL BE POURED AGAINST FIRM, UNDISTURBED GROUND.
3. CONCRETE SHALL MEET THE REQUIREMENTS FOR GRADE B CONCRETE IN CONFORMANCE WITH Mn/DOT 2461.
4. ALL METAL PARTS OF TIE ROD OR STRAP TYPE RESTRAINTS SHALL BE GALVANIZED OR COATED WITH ASPHALTIC TYPE RUSTPROOFING.

WATERMAIN CONCRETE BLOCKING QUANITIES

APPROVED
REVISED 3-19-13
CITY OF Otsego MINNESOTA
STANDARD PLATE NO. 202a

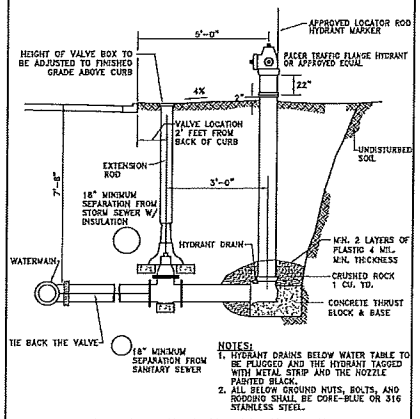

NOTES:
1. HYDRANT DRAINS BELOW WATER TABLE TO BE PLUGGED AND THE HYDRANT TAGGED WITH METAL STRIP AND THE NOZZLE PAINTED BLACK.
2. ALL BELOW GROUND NUTS, BOLTS, AND RODDING SHALL BE CORE-BLUE OR 316 STAINLESS STEEL.

HYDRANT AND VALVE INSTALLATION

NO SCALE

APPROVED
REVISED 8-18-15
CITY OF Otsego MINNESOTA
STANDARD PLATE NO. 204

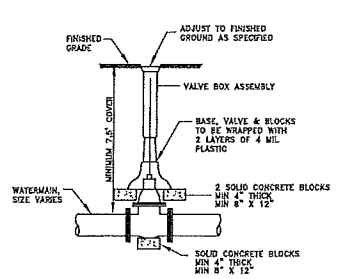

NOTES:
1. ALL VALVES SHALL BE FITTED WITH EXTENSION STEMS, TO BRING THE OPERATING NUT TO BE 2' FROM THE SURFACE.
2. ALL BELOW GROUND NUTS, BOLTS, AND RODDING SHALL BE CORE-BLUE OR 316 STAINLESS STEEL.

TYPICAL RESILIENT WEDGE VALVE & BOX INSTALLATION 10" & UNDER WATERMAIN

NO SCALE

APPROVED
REVISED 8-18-15
CITY OF Otsego MINNESOTA
STANDARD PLATE NO. 205

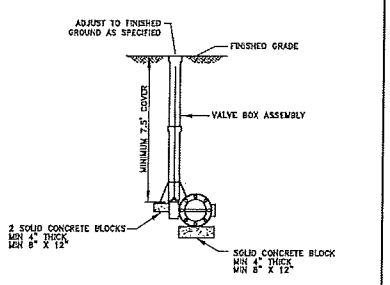

NOTES:
1. ALL VALVES SHALL BE FITTED WITH EXTENSION STEMS TO BRING THE OPERATING NUT TO BE 2' FROM THE SURFACE.
2. ALL BELOW GROUND NUTS, BOLTS, AND RODDING SHALL BE CORE-BLUE OR 316 STAINLESS STEEL.

TYPICAL BUTTERFLY VALVE & BOX INSTALLATION 12" & OVER WATERMAIN

NO SCALE

APPROVED
REVISED 8-18-15
CITY OF Otsego MINNESOTA
STANDARD PLATE NO. 206

DATE	REVISION

I hereby certify that this plan, specification, or report was prepared by me or under my direct supervision and that I am a duly Licensed Professional Engineer under the laws of the State of Minnesota.

BRENT ANDERSON, P.E.
Date 2/3/2015 Lic. No. 45850

DESIGNED BY: BWL
DRAWN BY: BWL
CHECKED BY: RJW

Hakanson Anderson
Civil Engineers and Land Surveyors
3601 Thurston Ave., Anoka, Minnesota 55303
763-427-5860 FAX 763-427-0520
www.hakanson-anderson.com

CITY OF Otsego MINNESOTA

CONSTRUCTION DETAILS
80TH STREET NE
CITY OF OTSEGO, MINNESOTA

SHEET 5 OF 28 SHEETS

OT393

Feb 03, 2016 – 2:18pm
K:\Civil_eng\PROJECTS\MUNICIPAL\OT393\dwg\OT393 QUANTITIES_DETAILS.dwg

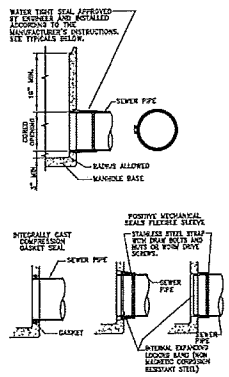

SLEEVE NOTES:

FLEXIBLE SLEEVE SHALL BE NEOPRENE MATERIAL MEETING THE REQUIREMENTS OF ASTM C-443 OR AS APPROVED

FLEXIBLE SLEEVE DIMENSIONS SHALL CONFORM TO MANUFACTURERS SPECIFICATIONS.

TYPICAL WATER TIGHT SEALS

NO SCALE

APPROVED
REVISED 8-18-15

CITY OF Otsego MINNESOTA

STANDARD PLATE NO. 301

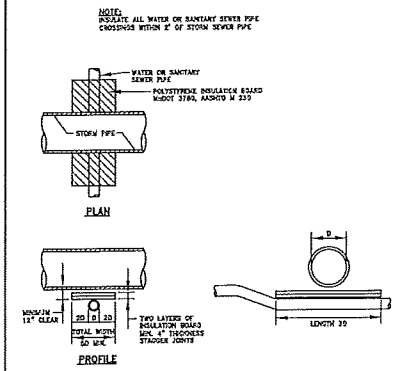

INSULATION FOR WATER & SANITARY SEWER PIPE & SERVICES

NO SCALE

APPROVED
REVISED MARCH 2005

CITY OF Otsego MINNESOTA

STANDARD PLATE NO. 304

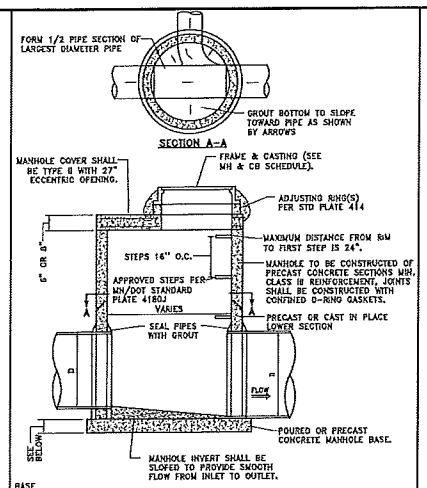

BASE
6" - 12 ft DEEP
8" - 12 ft TO 20 ft DEEP
10" - OVER 20 ft DEEP

SLAB-TOP MANHOLE

(STORM SEWER)
NO SCALE

APPROVED
REVISED 8-18-15

CITY OF Otsego MINNESOTA

STANDARD PLATE NO. 400

NOTES:

1. ALL NUTS, BOLTS, THREADED INSERTS, AND RODDING SHALL BE 316 STAINLESS STEEL.
2. ADJUSTMENT RINGS SHALL BE HIGH DENSITY POLYETHYLENE RINGS AS MANUFACTURED BY LADTECH, INC OR APPROVED EQUAL.
3. ALL RINGS SHALL MEET OR EXCEED MnDOT HS-20 TRAFFIC LOADING.
4. AS DETERMINED BY THE CITY ENGINEER, PRECAST CONCRETE ADJUSTING RINGS OR BRICK CHIMNEY WILL BE ALLOWED FOR ADJUSTING EXISTING MANHOLES.
5. CLEAN ALL SURFACES TO REMOVE SCALE OR LOOSE IMPEDIMENTS BEFORE PLACING ANY MASTIC, SEALANT, OR INSTALLATION OF FRAME AND CASTING SYSTEM.
6. PLACE TWO 1/2" BEADS OF BUTYL SEALANT BETWEEN FIRST ADJUSTMENT RING AND CONCRETE STRUCTURE. ONE BEAD BETWEEN EACH SUBSEQUENT RING AND FRAME.

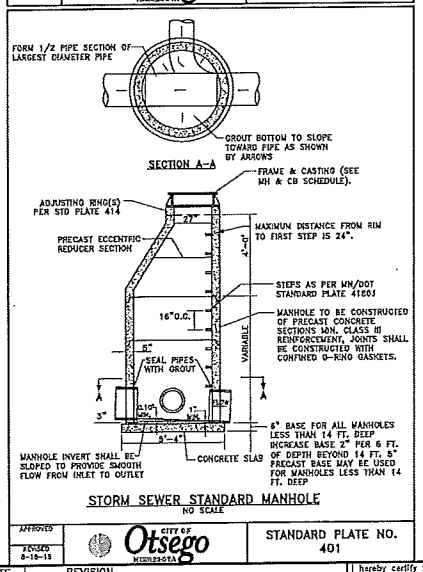

STORM SEWER STANDARD MANHOLE

NO SCALE

APPROVED
REVISED 8-18-15

CITY OF Otsego MINNESOTA

STANDARD PLATE NO. 401

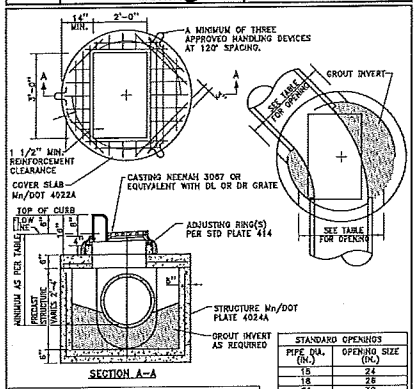

MINIMUM C.B. DEPTH - FLOW LINE TO INVERT		
PIPE DIA.	MIN. DEPTH	MINIMUM DEPTH WITH 2 RINGS
15	41 IN.	41 IN.
18	45 IN.	45 IN.
21	48 IN.	48 IN.
24	51 IN.	51 IN.

STANDARD OPENINGS	
PIPE DIA. (IN.)	OPENING SIZE (IN.)
15	24
18	28
21	30
24	34

48 INCH DIAMETER SHALLOW DEPTH CATCH BASIN

MAXIMUM 24 INCH DIAMETER PIPE SIZE
NO SCALE

APPROVED
REVISED 8-18-15

CITY OF Otsego MINNESOTA

STANDARD PLATE NO. 405

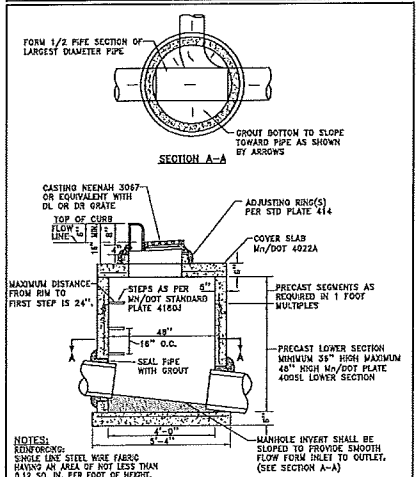

NOTES:
REINFORCING:
SINGLE LINE STEEL WIRE FABRIC HAVING AN AREA OF NOT LESS THAN 0.12 SQ. IN. PER FOOT OF HEIGHT.

STANDARD STORM MANHOLE - CATCH BASIN

MINIMUM COVER FLOW LINE - TO TOP OF PIPE = 2 FEET
NO SCALE

APPROVED
REVISED 8-18-15

CITY OF Otsego MINNESOTA

STANDARD PLATE NO. 406

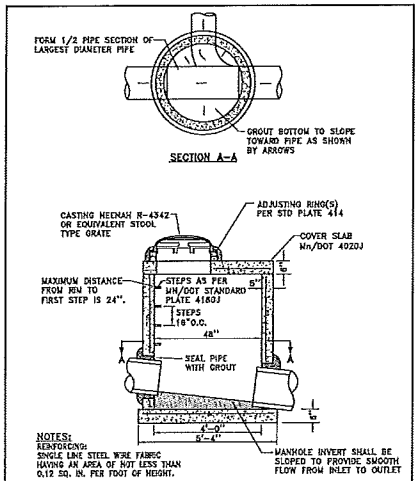

NOTES:
REINFORCING:
SINGLE LINE STEEL WIRE FABRIC HAVING AN AREA OF NOT LESS THAN 0.12 SQ. IN. PER FOOT OF HEIGHT.

STANDARD STORM MANHOLE-YARD INLET

NO SCALE

APPROVED
REVISED 8-18-15

CITY OF Otsego MINNESOTA

STANDARD PLATE NO. 408

DATE	REVISION

I hereby certify that this plan, specification, or report was prepared by me or under my direct supervision and that I am a duly Licensed Professional Engineer under the laws of the State of Minnesota.

BRENT PARSON, P.E.
Date 2/3/2015 Lic. No. 45850

REVISED BY: BML
DRAWN BY: BML
CHECKED BY: RJW

Hakanson Anderson
Civil Engineers and Land Surveyors
3601 Thurston Ave., Anoka, Minnesota 55303
763-427-5860 FAX 763-427-0520
www.hakanson-anderson.com

CITY OF Otsego MINNESOTA

CONSTRUCTION DETAILS

80TH STREET NE
CITY OF OTSEGO, MINNESOTA

SHEET 6 OF 28 SHEETS

OT393

Feb 02, 2015 - 2:19pm
K:\Hak-Proj\OTSEGO\PROPOSAL\OT393\dwg\OT393 QUANTITIES_DETAILS.dwg

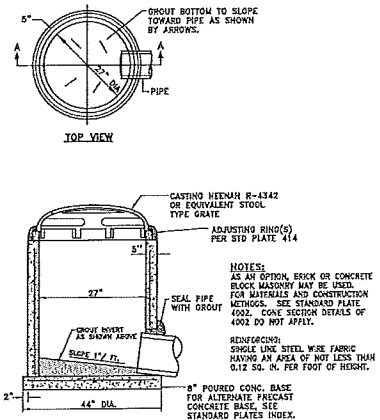

NOTES:
AS AN OPTION, BRICK OR CONCRETE BLOCK MASONRY MAY BE USED. FOR MATERIALS AND CONSTRUCTION METHODS, SEE STANDARD PLATE 4002. CONE SECTION DETAILS OF 4002 DO NOT APPLY.

REINFORCING:
SINGLE LINE STEEL WIRE FABRIC HAVING AN AREA OF NOT LESS THAN 0.12 SQ. IN. PER FOOT OF HEIGHT.

27" PRECAST CATCH BASIN YARD INLET
NO SCALE

APPROVED / REVISED 8-18-15 — Otsego MINNESOTA — STANDARD PLATE NO. 409

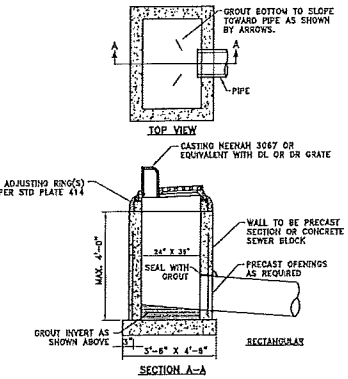

NOTES:
1. CONCRETE BASE SHALL BE 6" POURED IN PLACE OR 5" PRECAST SLAB.
2. REINFORCING SHALL BE SINGLE LINE STEEL WIRE FABRIC HAVING AN AREA OF NOT LESS THAN 0.12 SQ. IN. PER FOOT OF HEIGHT.

2' x 3' CATCH BASIN
NO SCALE

APPROVED / REVISED 8-18-15 — Otsego MINNESOTA — STANDARD PLATE NO. 410

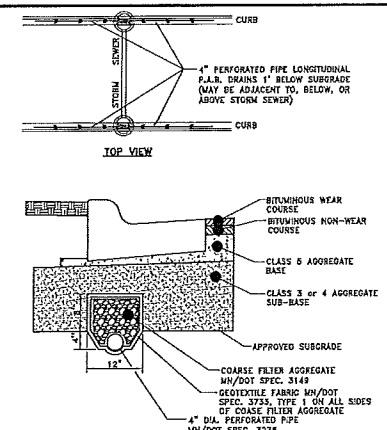

NOTES:
1. MINIMUM 25' OUT OF CATCH BASINS.
2. MINIMUM SLOPE OF PERFORATED PIPE SHALL BE 1%.

LONGITUDINAL PERMEABLE AGGREGATE BASE (P.A.B.) DRAIN
NO SCALE

APPROVED / REVISED 5-10-07 — Otsego MINNESOTA — STANDARD PLATE NO. 412

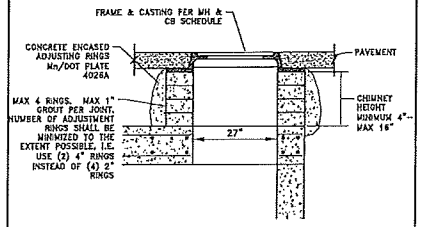

NOTES:
1. PRECAST CONCRETE OR BRICK CHIMNEY RINGS MAY BE USED FOR ALL CATCH BASINS, EXISTING STORM MANHOLES, AND ANY NEW MANHOLES OUTSIDE OF PAVED AREAS AND WITHIN CURB AND GUTTER.
2. STORM MANHOLES WITHIN PAVED AREAS SHALL USE HDPE "PLASTIC" RINGS AND CONFORM TO STD PLATE 309
3. CONCRETE ENCASED ADJUSTING RINGS Mn/DOT PLATE 4026A
4. SHIMS USED FOR LEVELING SHALL BE METAL OR CONCRETE

STORM MANHOLE ADJUSTMENT RINGS
NO SCALE

APPROVED / REVISED 8-18-15 — Otsego MINNESOTA — STANDARD PLATE NO. 414

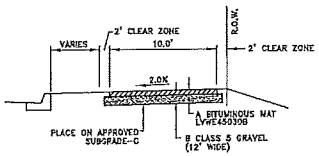

TYPICAL SECTION – BIKE TRAIL
NO SCALE

LEGEND				
AASHTO	R VALUE	BITUMINOUS SURFACE	AGGREGATE BASE	
SUBGRADE SOIL CLASS		MN/DOT 2350/2390 A	CLASS 5 3138 B*	CLASS 3 OR 4 3139 C*
A-1	R-70	** 3.5"	** 5"	-
A-2	R-20	3.0"	5"	-
A-3	R-15	3.0"	6"	-
A-4	R-10	3.0"	7"	-
A-7	R-5	3.0"	7"	12"

* SUBJECT TO REVIEW BY QUALIFIED SOILS ENGINEER
** MINIMUM ALLOWABLE DESIGN THICKNESS

NOTES: A VALUE IS A MEASURE OF EMBANKMENT SOIL RESISTANCE STRENGTH AS DETERMINED BY THE HVEEM STABILOMETER METHOD

APPROVED / REVISED 8-18-15 — Otsego MINNESOTA — STANDARD PLATE NO. 707

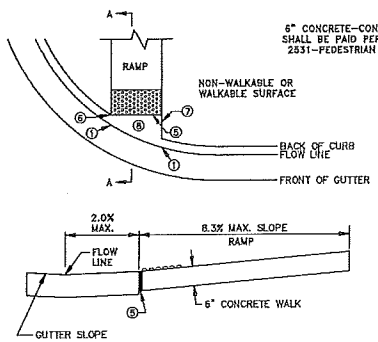

SECTION A-A

1/6 CURB DETAIL

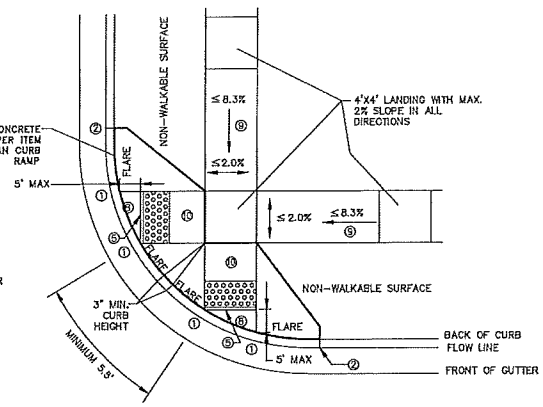

ADJACENT TO NON-WALKABLE SURFACE

4/6 COMBINED DIRECTIONAL LAYOUT

GENERAL NOTES:
1. SEE Mn/DOT STANDARD PLATE 7038 FOR DETAILS ON DETECTABLE WARNING.
2. NO CUTTING OF DETECTABLE WARNINGS ARE ALLOWED UNLESS APPROVED BY THE ENGINEER.
3. ALL DETECTABLE WARNINGS SHALL BE PLACED IN CONCRETE.
4. DETECTABLE WARNINGS SHALL BE DARK GRAY IN COLOR. A SAMPLE OF THE TRUNCATED DOME PANEL SHALL BE PROVIDED TO THE CITY FOR APPROVAL PRIOR TO CONSTRUCTION. PLASTIC PANELS ARE NOT ACCEPTABLE.

REFERENCE NOTES:
1. 0" CURB HEIGHT.
2. FULL CURB HEIGHT.
3. FLARES SHALL START AT THE SAME POINT ON BOTH SIDES OF THE RAMP.
4. SHOULD BE 1:10 WHEN ADJACENT TO WALKABLE SURFACES & SHOULD BE 3' WHEN ADJACENT TO NON-WALKABLE SURFACES.
5. 1/2" PREFORMED JOINT FILLER MATERIAL AASHTO M213. JOINT FILLER SHALL BE PLACED FLUSH WITH THE BACK OF CURB/FRONT OF THE DETECTABLE WARNING. JOINT SHALL BE FREE OF DEBRIS.
6. DETECTABLE WARNING SHALL HAVE ONE CORNER 3" TO 4" MINIMUM FROM THE BACK OF CURB UP TO 8" MAXIMUM.
7. SHALL BE 2' MAXIMUM OFFSET WHEN ADJACENT TO WALKABLE SURFACE AND 5' MAXIMUM OFFSET WHEN ADJACENT TO NON-WALKABLE SURFACE.
8. MAX. 2% SLOPE IN ALL DIRECTIONS IN FRONT OF GRADE BREAK AND DRAIN TO FLOW LINE. SHALL BE CONSTRUCTED INTEGRAL WITH CURB AND GUTTER.
9. IF RAMP SLOPE IS LESS THAN 5%, NO SECONDARY LANDING IS REQUIRED.
10. RUNNING SLOPE LESS THAN OR EQUAL TO 8.3% AND CROSS SLOPE LESS THAN OR EQUAL TO 2%.

DATE	REVISION

I hereby certify that this plan, specification, or report was prepared by me or under my direct supervision and that I am a duly Licensed Professional Engineer under the laws of the State of Minnesota.

BRENT BARSON, P.E.
Date 2/3/2015 Lic. No. 45850

DESIGNED BY: BWL
DRAWN BY: BWL
CHECKED BY: RJW

Hakanson Anderson
Civil Engineers and Land Surveyors
3601 Thurston Ave., Anoka, Minnesota 55303
763-427-5860 FAX 763-427-0520
www.hakanson-anderson.com

Otsego MINNESOTA

CONSTRUCTION DETAILS
80TH STREET NE
CITY OF OTSEGO, MINNESOTA

SHEET 7 OF 28 SHEETS

OT393

Feb 03, 2015 – 2:19pm
K:\Land_Proj\PROJECTS\FUNDPALM\OT393\dwg\OT393 QUANTITIES_DETAILS.dwg

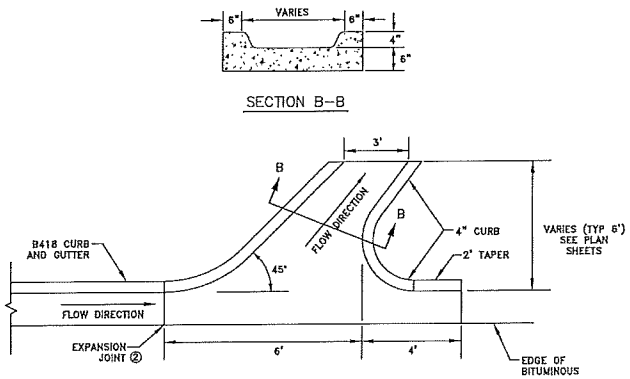

3/11 BITUMINOUS FLUME ②

N.T.S.

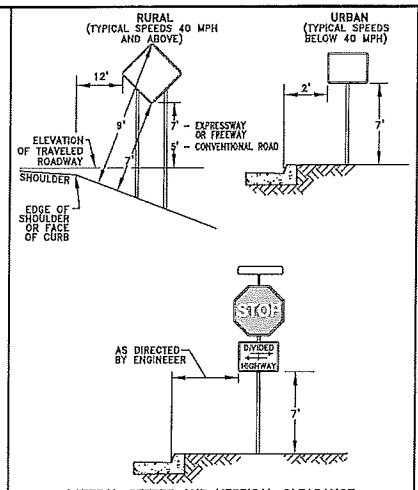

LATERAL OFFSET AND VERTICAL CLEARANCE REQUIREMENTS FOR TYPE C & D SIGNS

NO SCALE

APPROVED		
REVISED FEB 2008	CITY OF Otsego MINNESOTA	STANDARD PLATE NO. 800

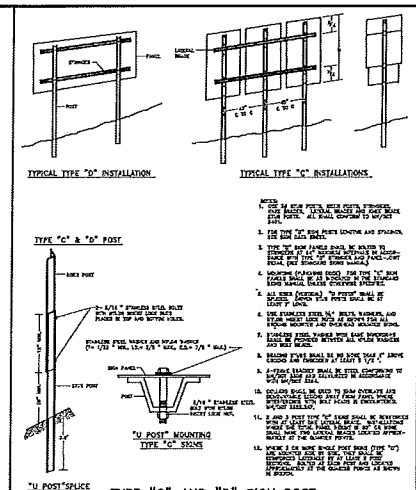

TYPE "C" AND "D" SIGN POST INSTALLATION DETAIL

NO SCALE

APPROVED		
REVISED FEB 2009	CITY OF Otsego MINNESOTA	STANDARD PLATE NO. 801

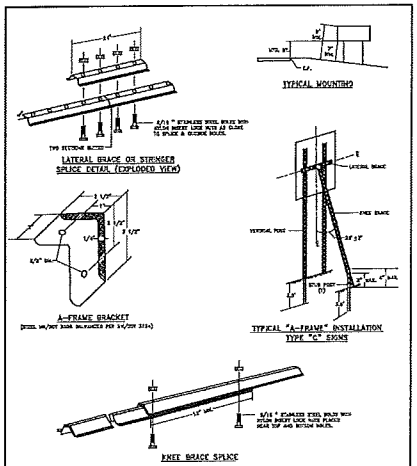

A-FRAME AND STRINGER BRACING DETAIL

NO SCALE

APPROVED		
REVISED FEB 2009	CITY OF Otsego MINNESOTA	STANDARD PLATE NO. 802A

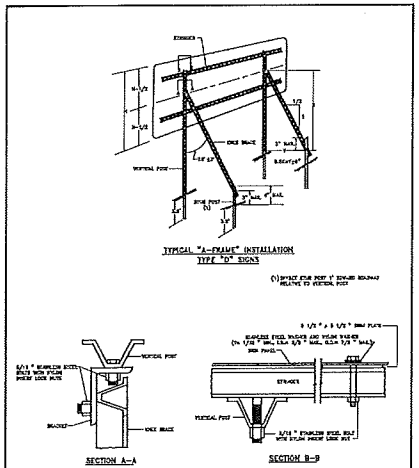

A-FRAME AND STRINGER BRACING DETAIL

NO SCALE

APPROVED		
REVISED FEB 2009	CITY OF Otsego MINNESOTA	STANDARD PLATE NO. 802B

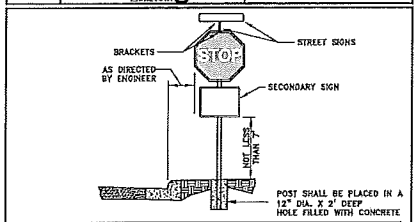

FURNISH AND INSTALL NEW SIGNS				
SIGN NUMBER	SIGN	COLOR	SIZE	COMMENTS
R1-1	STOP	WHITE ON RED	30"x 30"	
	STREET NAME	WHITE ON GREEN	9" PLATES	ALL INTERSECTIONS

NOTES:

POSTS SHALL BE CYLINDRICAL TUBE STEEL POSTS. THE POST SHALL BE 12' LONG, WITH 2-3/8" OD, 12 GAUGE COLD ROLLED GALVANIZE STEEL MEETING ASTM A-446 GRADE A.

SIGN BASE MATERIAL SHALL BE ALUMINUM.

THE STREET NAME SIGNS SHALL BE NOTCHED AND MOUNTED IN AN EASO BRACKET AND PLACED ABOVE THE STOP SIGN.

STREET NAME SIGNS SHALL HAVE HIGH INTENSITY PRISMATIC RETROREFLECTIVE SHEETING (ASTM TYPE IV).

STOP SIGNS SHALL HAVE DIAMOND GRADE VIP RETROREFLECTIVE SHEETING (ASTM TYPE IX).

SIGNS AND INSTALLATION OF SIGNS SHALL BE IN ACCORDANCE WITH THE "MINNESOTA MANUAL ON UNIFORM TRAFFIC CONTROL DEVICES"

STOP SIGN AND STREET NAME SIGN DETAIL

NO SCALE

APPROVED		
REVISED 5-18-15	CITY OF Otsego MINNESOTA	STANDARD PLATE NO. 805

DATE	REVISION

I hereby certify that this plan, specification, or report was prepared by me or under my direct supervision and that I am a duly Licensed Professional Engineer under the laws of the State of Minnesota.

BRENT BIRSON, P.E.

Date 2/3/2015 Lic. No. 45850

DESIGNED BY: BML
DRAWN BY: BML
CHECKED BY: RJW

Hakanson Anderson
Civil Engineers and Land Surveyors
3601 Thurston Ave., Anoka, Minnesota 55303
763-427-5860 FAX 763-427-0520
www.hakanson-anderson.com

CITY OF Otsego MINNESOTA

CONSTRUCTION DETAILS

80TH STREET NE
CITY OF OTSEGO, MINNESOTA

SHEET 8 OF 28 SHEETS

OT393

Feb 05, 2015 - 2:30pm
K:\civil_eng\PROJECTS\UNIOPAL\OT393\A4\OT393 QUANTITIES_DETAILS.dwg

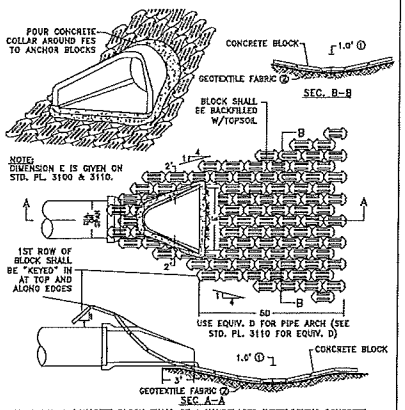

ARTICULATED CONCRETE BLOCK SHALL BE A HANDPLACED INTERLOCKING CONCRETE BLOCK SYSTEM, CABLE CONNECTED CONCRETE BLOCK MAT, OR APPROVED EQUAL.

① FOR PIPES GREATER THAN OR EQUAL TO 48", USE 2.0'

② GEOTEXTILE FABRIC PER Mn/DOT SPEC. 3733. FABRIC SHALL BE OVERSIZED A MINIMUM OF 12" AND COVER THE ENTIRE AREA UNDER THE BLOCK MAT AND EXTEND UNDER THE CULVERT APRON 3 FEET.

③ IF A CABLE CONCRETE SYSTEM IS USED, MULTIPLE MATS MUST BE TIED TOGETHER PER MANUFACTURERS SPEC. AND ALL CABLES PROTRUDING BEYOND THE FINISHED EDGES SHALL BE CUT FLUSH TO THE BLOCK.

ARTICULATED CONCRETE BLOCK AT R.C.P. OUTLET

NO SCALE

APPROVED	CITY OF Otsego MINNESOTA	STANDARD PLATE NO. 500
REVISED 6-18-15		

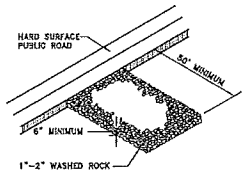

ROCK CONSTRUCTION ENTRANCE

NO SCALE

APPROVED	CITY OF Otsego MINNESOTA	STANDARD PLATE NO. 505
REVISED		

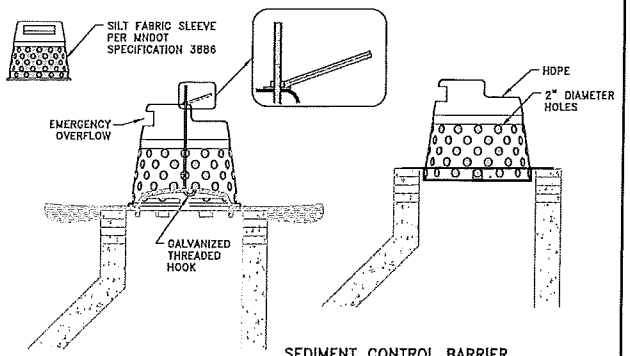

6/14 SEDIMENT CONTROL BARRIER FOR MEDIAN DRAINS

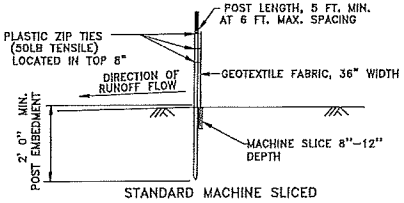

2/14 SILT FENCE DETAILS ⑭

TO PROTECT AREAS FROM SHEET FLOW (SEE SPEC. 3886)

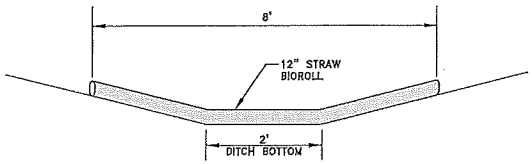

3/14 SEDIMENT CONTROL LOG TYPE STRAW

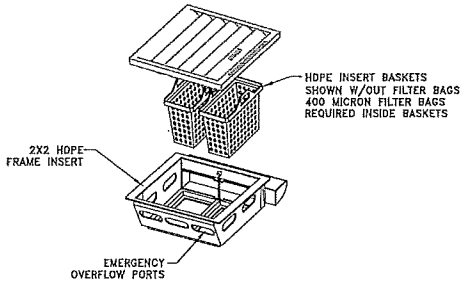

5/14 DEBRIS COLLECTION DEVICE FOR CATCH BASINS

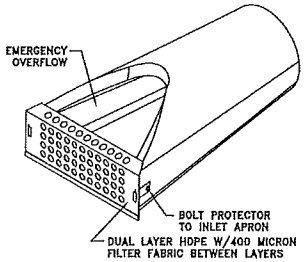

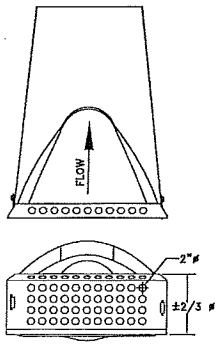

7/14 CULVERT INLET PROTECTOR

EROSION CONTROL NOTES:

① PRIOR TO ANY CONSTRUCTION ACTIVITIES THE CONTRACTOR SHALL ACQUIRE THE NECESSARY MPCA-NPDES STORMWATER PERMIT. A STORM WATER POLLUTION PREVENTION PLAN (SWPPP) HAS BEEN PREPARED COVERING CONSTRUCTION ACTIVITIES.

② THE CONTRACTOR SHALL INSTALL EROSIONAL SEDIMENT CONTROL FACILITIES (BMP'S) PRIOR TO GRADING AND REMOVAL ACTIVITIES. BMP'S SHALL BE MAINTAINED FOR THE DURATION OF CONSTRUCTION ACTIVITIES AND POTENTIAL FOR EROSION HAS PASSED.

③ THE CONTRACTOR SHALL SCHEDULE HIS OPERATION TO MINIMIZE THE AMOUNT OF DISTURBED AREA AT ANY GIVEN TIME.

④ BMP'S SHALL BE INSPECTED DAILY BY THE CONTRACTOR AND DOCUMENTED IN THE SWPPP INSPECTION LOG. WEEKLY LOGS MUST BE FORWARDED TO THE ENGINEER FOR REVIEW.

⑤ ALL EROSION AND SEDIMENT CONTROL MEASURES SHALL BE PROPERLY DISPOSED OF WITHIN THIRTY (30) DAYS AFTER FINAL SITE STABILIZATION IS APPROVED BY THE ENGINEER.

⑥ THE CONTRACTOR SHALL FILE NOTICE OF TERMINATION (NOT) WITH THE MPCA WHEN FINAL STABILIZATION IS APPROVED BY THE ENGINEER.

⑦ WHEN SEDIMENTS DEPOSIT IN A WATER OF THE STATE, THE MATERIAL MUST BE REMOVED WITHIN 7 DAYS.

⑧ PRIOR TO EXPORTING MATERIALS OR DEBRIS, CONTRACTOR SHALL PROVIDE A STABILIZED CONSTRUCTION EXIT PER 1/14. SEE SHEETS 24-32 FOR STABILIZED CONSTRUCTION EXIT LOCATIONS.

⑨ ALL EXPOSED SOIL AREAS MUST BE STABILIZED AS SOON AS POSSIBLE TO LIMIT SOIL EROSION BUT IN NO CASE LATER THAN 7 DAYS AFTER THE CONSTRUCTION ACTIVITY IN THAT PORTION OF THE SITE HAS TEMPORARILY OR PERMANENTLY CEASED.

⑩ ALL DISTURBED AREAS REQUIRE 12" OF TOPSOIL, SEED MIXTURE AND TYPE I MULCH MATERIAL OR EROSION CONTROL BLANKET. THE TURF ESTABLISHMENT SHALL CONFORM TO MnDOT STANDARD SPECIFICATIONS.

⑪ SEE SHEET 2 FOR TYPE AND APPLICATION RATES OF MULCH, SEED AND FERTILIZER.

⑫ TYPE I MULCH SHALL BE DISK ANCHORED. DISK ANCHORING SHALL BE INCLUDED IN THE COST OF ITEM 2575-MULCH MATERIAL.

⑬ SEE THE SWPPP FOR THE SEQUENCE OF CONSTRUCTION ACTIVITIES.

⑭ SILT FENCE SHALL FOLLOW AS CLOSELY AS POSSIBLE A SINGLE CONTOUR LINE.

DATE	REVISION

I hereby certify that this plan, specification, or report was prepared by me or under my direct supervision and that I am a duly Licensed Professional Engineer under the laws of the State of Minnesota.

BRENT BLAKSON, P.E.
Date 2/3/2015 Lic. No. 45860

DESIGN BY: BML
RUN BY: BML
CHECK BY: RJW

Hakanson Anderson
Civil Engineers and Land Surveyors
3601 Thurston Ave., Anoka, Minnesota 55303
763-427-5860 FAX 763-427-0520
www.hakanson-anderson.com

CITY OF Otsego MINNESOTA

EROSION AND SEDIMENT CONTROL DETAILS

80TH STREET NE
CITY OF OTSEGO, MINNESOTA

SHEET 9 OF 28 SHEETS

OT393

Feb 02, 2016 - 2:32pm
K:\civil_eng\PROJECTS\MUNICIPAL\OT393\dwg\OT393 SUMMITRIDGE\DETAILS.dwg

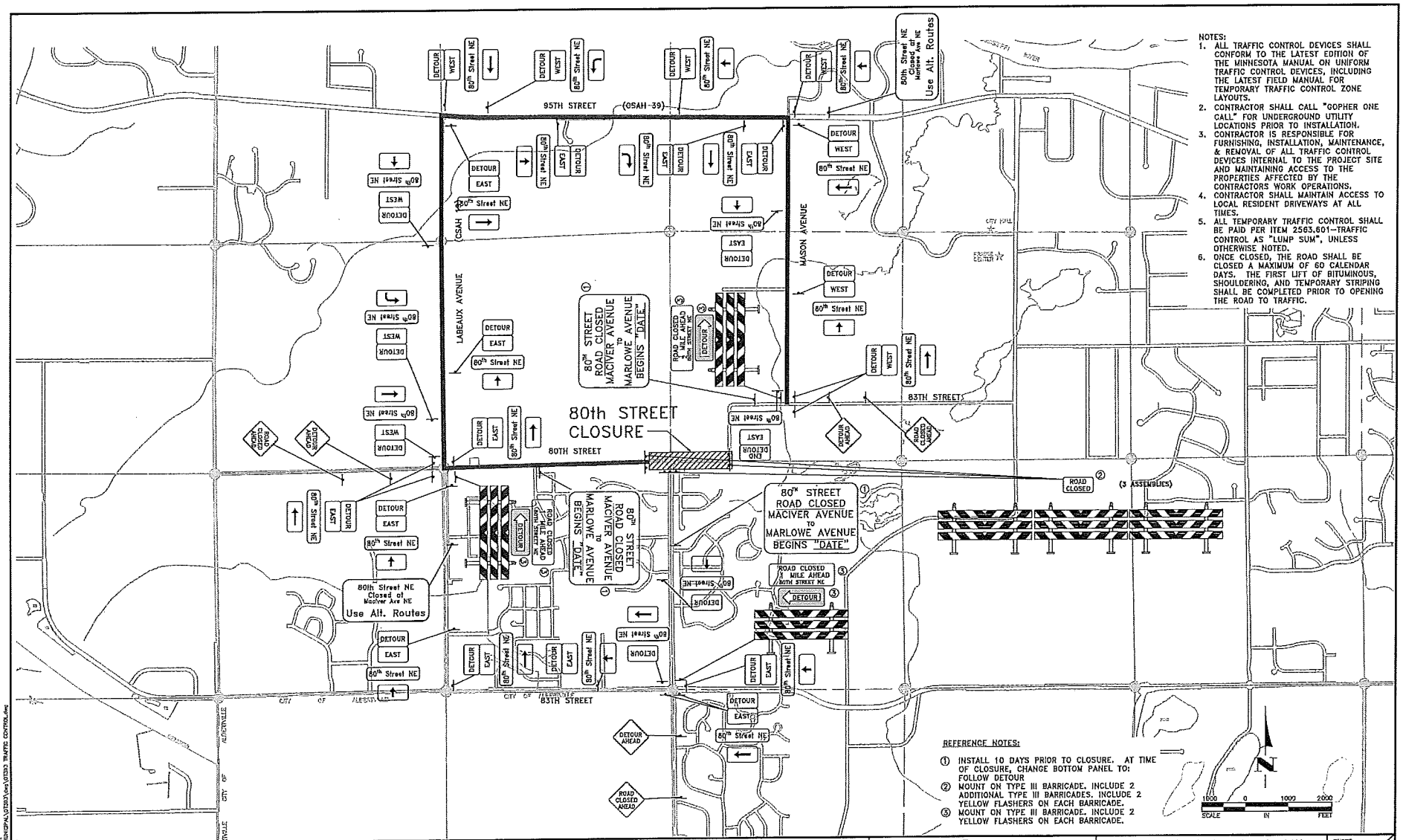

NOTES:

1. ALL TRAFFIC CONTROL DEVICES SHALL CONFORM TO THE LATEST EDITION OF THE MINNESOTA MANUAL ON UNIFORM TRAFFIC CONTROL DEVICES, INCLUDING THE LATEST FIELD MANUAL FOR TEMPORARY TRAFFIC CONTROL ZONE LAYOUTS.
2. CONTRACTOR SHALL CALL "GOPHER ONE CALL" FOR UNDERGROUND UTILITY LOCATIONS PRIOR TO INSTALLATION.
3. CONTRACTOR IS RESPONSIBLE FOR FURNISHING, INSTALLATION, MAINTENANCE, & REMOVAL OF ALL TRAFFIC CONTROL DEVICES INTERNAL TO THE PROJECT SITE AND MAINTAINING ACCESS TO THE PROPERTIES AFFECTED BY THE CONTRACTORS WORK OPERATIONS.
4. CONTRACTOR SHALL MAINTAIN ACCESS TO LOCAL RESIDENT DRIVEWAYS AT ALL TIMES.
5. ALL TEMPORARY TRAFFIC CONTROL SHALL BE PAID PER ITEM 2563.601–TRAFFIC CONTROL AS "LUMP SUM", UNLESS OTHERWISE NOTED.
6. ONCE CLOSED, THE ROAD SHALL BE CLOSED A MAXIMUM OF 60 CALENDAR DAYS. THE FIRST LIFT OF BITUMINOUS, SHOULDERING, AND TEMPORARY STRIPING SHALL BE COMPLETED PRIOR TO OPENING THE ROAD TO TRAFFIC.

REFERENCE NOTES:

① INSTALL 10 DAYS PRIOR TO CLOSURE. AT TIME OF CLOSURE, CHANGE BOTTOM PANEL TO: FOLLOW DETOUR
② MOUNT ON TYPE III BARRICADE. INCLUDE 2 ADDITIONAL TYPE III BARRICADES. INCLUDE 2 YELLOW FLASHERS ON EACH BARRICADE.
③ MOUNT ON TYPE III BARRICADE. INCLUDE 2 YELLOW FLASHERS ON EACH BARRICADE.

DATE	REVISION

I hereby certify that this plan, specification, or report was prepared by me or under my direct supervision and that I am a duly Licensed Professional Engineer under the laws of the State of Minnesota.

BRENT LARSON, P.E.
Date 2/3/2016 Lic. No. 45850

DRAWN BY: BML
CHECKED BY: BML
DESIGNED BY: RJW

Hakanson Anderson
Civil Engineers and Land Surveyors
3601 Thurston Ave., Anoka, Minnesota 55303
763-427-5860 FAX 763-427-0520
www.hakanson-anderson.com

CITY OF Otsego MINNESOTA

TEMPORARY TRAFFIC CONTROL PLAN
80TH STREET NE
CITY OF OTSEGO, MINNESOTA

SHEET 10 OF 28 SHEETS

OT393

Feb 02, 2016 - 2:15pm
W:\Projects\OTSEGO\HICIP\ALT\OTSEGO\dwg\OT393 TRAFFIC CONTROL.dwg

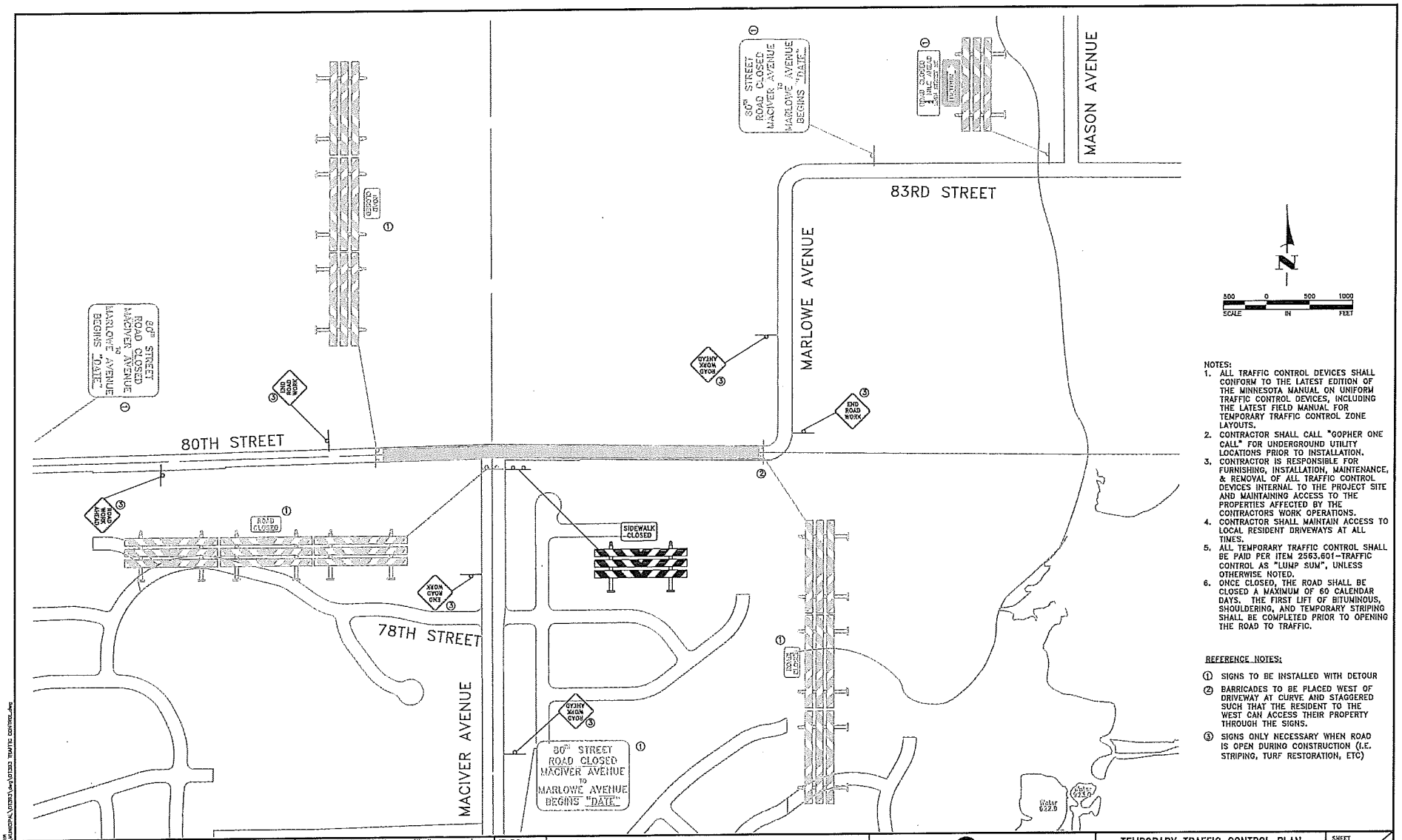

NOTES:

1. ALL TRAFFIC CONTROL DEVICES SHALL CONFORM TO THE LATEST EDITION OF THE MINNESOTA MANUAL ON UNIFORM TRAFFIC CONTROL DEVICES, INCLUDING THE LATEST FIELD MANUAL FOR TEMPORARY TRAFFIC CONTROL ZONE LAYOUTS.
2. CONTRACTOR SHALL CALL "GOPHER ONE CALL" FOR UNDERGROUND UTILITY LOCATIONS PRIOR TO INSTALLATION.
3. CONTRACTOR IS RESPONSIBLE FOR FURNISHING, INSTALLATION, MAINTENANCE, & REMOVAL OF ALL TRAFFIC CONTROL DEVICES INTERNAL TO THE PROJECT SITE AND MAINTAINING ACCESS TO THE PROPERTIES AFFECTED BY THE CONTRACTORS WORK OPERATIONS.
4. CONTRACTOR SHALL MAINTAIN ACCESS TO LOCAL RESIDENT DRIVEWAYS AT ALL TIMES.
5. ALL TEMPORARY TRAFFIC CONTROL SHALL BE PAID PER ITEM 2563.601-TRAFFIC CONTROL AS "LUMP SUM", UNLESS OTHERWISE NOTED.
6. ONCE CLOSED, THE ROAD SHALL BE CLOSED A MAXIMUM OF 60 CALENDAR DAYS. THE FIRST LIFT OF BITUMINOUS, SHOULDERING, AND TEMPORARY STRIPING SHALL BE COMPLETED PRIOR TO OPENING THE ROAD TO TRAFFIC.

REFERENCE NOTES:

① SIGNS TO BE INSTALLED WITH DETOUR

② BARRICADES TO BE PLACED WEST OF DRIVEWAY AT CURVE AND STAGGERED SUCH THAT THE RESIDENT TO THE WEST CAN ACCESS THEIR PROPERTY THROUGH THE SIGNS.

③ SIGNS ONLY NECESSARY WHEN ROAD IS OPEN DURING CONSTRUCTION (I.E. STRIPING, TURF RESTORATION, ETC)

DATE	REVISION

I hereby certify that this plan, specification, or report was prepared by me or under my direct supervision and that I am a duly Licensed Professional Engineer under the laws of the State of Minnesota.

BRENT CARSON, P.E.

Date 2/3/2016 Lic. No. 45850

DESIGNED BY: BML
DRAWN BY: BML
CHECKED BY: RJW

Hakanson Anderson
Civil Engineers and Land Surveyors
3601 Thurston Ave., Anoka, Minnesota 55303
763-427-5860 FAX 763-427-0520
www.hakanson-anderson.com

CITY OF Otsego MINNESOTA

TEMPORARY TRAFFIC CONTROL PLAN
80TH STREET NE
CITY OF OTSEGO, MINNESOTA

SHEET 11 OF 28 SHEETS

OT393

Feb 02, 2016 - 2:37pm
X:\Projects\OT393\DWG\PLAN\OT393TMP01.dwg OT393 TRAFFIC CONTROL.dwg

FURNISH AND INSTALL NEW SIGNS

SIGN NO.	SIGN	COLOR AND SIZE	QUANTITY	COMMENTS
TYPE III BARRICADE		48"x 8" WHITE ON ORANGE		(2) FLASHERS REQUIRED
W20-1	ROAD WORK AHEAD	BLACK ON ORANGE 36" X 36"		FLASHER REQUIRED
G20-2A	END ROAD WORK	BLACK ON ORANGE 36" X 36"		
W20-2	DETOUR AHEAD	BLACK ON ORANGE 36" X 36"		FLASHER REQUIRED
W20-3	ROAD CLOSED AHEAD	BLACK ON ORANGE 36" X 36"		FLASHER REQUIRED
M3-2A	EAST	WHITE ON BLUE 24" X 12"		
M3-2A	WEST	WHITE ON BLUE 24" X 12"		
M4-8	DETOUR	BLACK ON ORANGE 24" X 12"		
M4-8A	END DETOUR	BLACK ON ORANGE 24" X 12"		
M5-1A	←	BLACK ON WHITE 21" X 15"		
M5-1A	→	BLACK ON WHITE 21" X 15"		
M5-1A	↰	BLACK ON WHITE 21" X 15"		
M5-1A	↱	BLACK ON WHITE 21" X 15"		
M6-3A	↑	BLACK ON WHITE 21" X 15"		
M6-3A	↑	BLACK ON WHITE 21" X 15"		
	80th Street NE	BLACK ON WHITE 9" X 48"		6" TYPE B LETTERING
R11-2	ROAD CLOSED	BLACK ON WHITE 48" X 30"		MOUNT ON TYPE III BARRICADE
M4-10R	DETOUR	BLACK ON ORANGE 48" X 18"		
M4-10L	DETOUR	BLACK ON ORANGE 48" X 18"		
R11-3	ROAD CLOSED ½ MILES AHEAD 80TH STREET NE	BLACK ON WHITE 60" X 30"		
R11-3	ROAD CLOSED 1 MILES AHEAD 80TH STREET NE	BLACK ON WHITE 60" X 30"		
① G20-X1	80th STREET ROAD CLOSED MACIVER AVENUE TO MARLOWE AVENUE BEGINS "DATE"	BLACK ON ORANGE 72"x 60"		INSTALL 10 DAYS PRIOR TO CLOSURE. AT THE TIME OF CLOSURE, CHANGE BOTTOM TO: FOLLOW DETOUR
①	80th Street NE Closed at " " Use Alt. Routes	BLACK ON ORANGE ?? x ??		

REFERENCE NOTES:

① INSTALL SIGNS ON PERMANENT POSTS PER STRUCTURAL DETAIL FOR TYPE C AND D SIGNS. 6" SERIES C LETTERING SHALL BE USED ON THE SIGNS. POSTS SHALL BE REMOVED UPON REOPENING ROAD. ALL DISTRUBED AREAS SHALL BE RESORTED.

NOTES:

1. ALL TRAFFIC CONTROL DEVICES SHALL CONFORM TO THE LATEST EDITION OF THE MINNESOTA MANUAL ON UNIFORM TRAFFIC CONTROL DEVICES, INCLUDING THE LATEST FIELD MANUAL FOR TEMPORARY TRAFFIC CONTROL ZONE LAYOUTS.
2. CONTRACTOR SHALL CALL "GOPHER ONE CALL" FOR UNDERGROUND UTILITY LOCATIONS PRIOR TO INSTALLATION.
3. CONTRACTOR IS RESPONSIBLE FOR FURNISHING, INSTALLATION, MAINTENANCE, & REMOVAL OF ALL TRAFFIC CONTROL DEVICES INTERNAL TO THE PROJECT SITE AND MAINTAINING ACCESS TO THE PROPERTIES AFFECTED BY THE CONTRACTORS WORK OPERATIONS.
4. CONTRACTOR SHALL MAINTAIN ACCESS TO LOCAL RESIDENT DRIVEWAYS AT ALL TIMES.
5. ALL TEMPORARY TRAFFIC CONTROL SHALL BE PAID PER ITEM 2563.601-TRAFFIC CONTROL AS "LUMP SUM", UNLESS OTHERWISE NOTED.
6. ONCE CLOSED, THE ROAD SHALL BE CLOSED A MAXIMUM OF 60 CALENDAR DAYS. THE FIRST LIFT OF BITUMINOUS, SHOULDERING, AND TEMPORARY STRIPING SHALL BE COMPLETED PRIOR TO OPENING THE ROAD TO TRAFFIC.

DATE	REVISION

I hereby certify that this plan, specification, or report was prepared by me or under my direct supervision and that I am a duly Licensed Professional Engineer under the laws of the State of Minnesota.

BRIAN LARSON, P.E.
Date 2/3/2016 Lic. No. 45850

DESIGNED BY: BML
DRAWN BY: BML
CHECKED BY: RJW

Hakanson Anderson
Civil Engineers and Land Surveyors
3601 Thurston Ave., Anoka, Minnesota 55303
763-427-5860 FAX 763-427-0520
www.hakanson-anderson.com

CITY OF Otsego MINNESOTA

TEMPORARY TRAFFIC CONTROL TABULATION

80TH STREET NE
CITY OF OTSEGO, MINNESOTA

SHEET 12 OF 28 SHEETS

OT393

Feb 02, 2016 - 3:24pm
K:\Civil_Projects\MNOPAL\OT393\dwg\OT393 TRAFFIC CONTROL.dwg

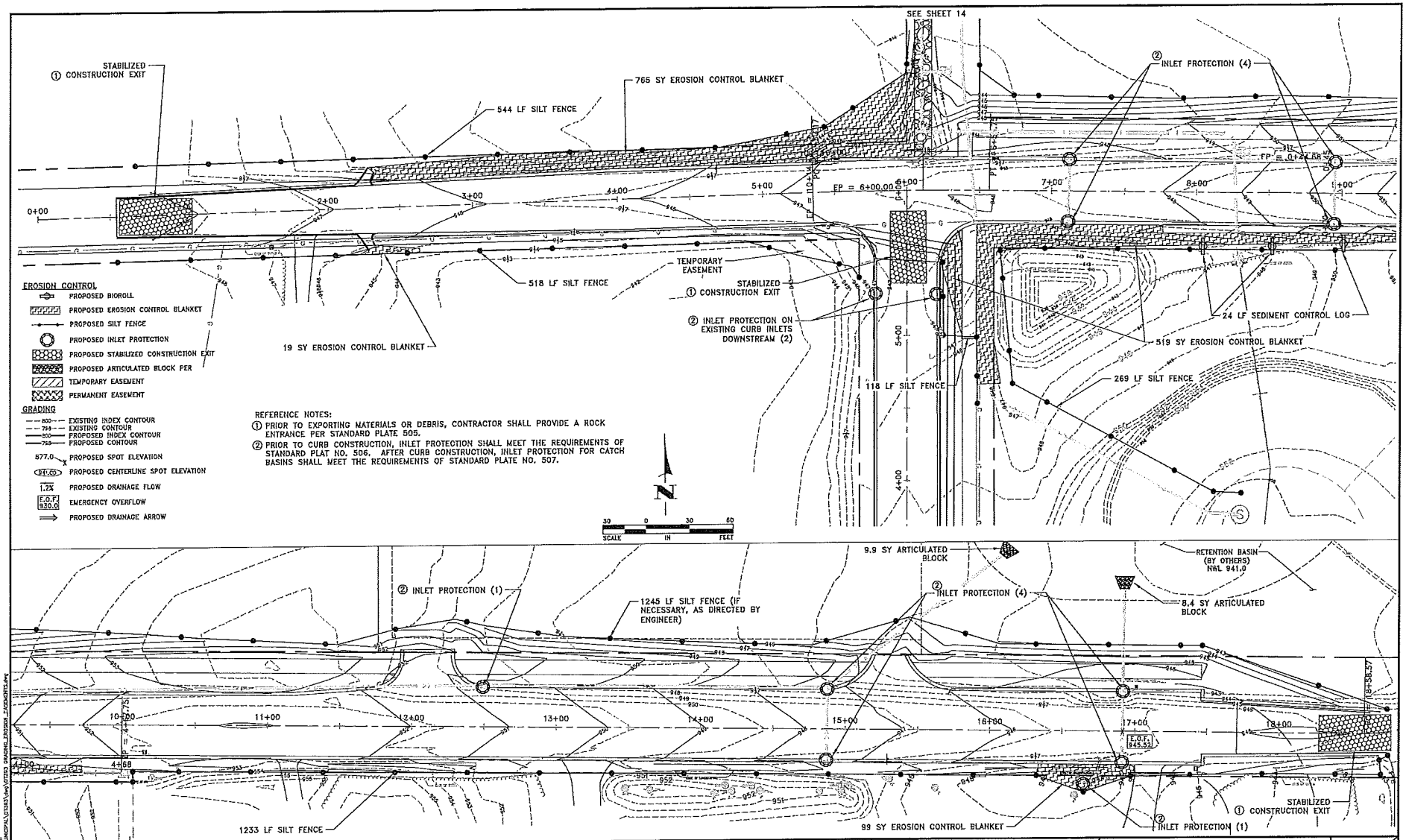

DATE	REVISION

I hereby certify that this plan, specification, or report was prepared by me or under my direct supervision and that I am a duly Licensed Professional Engineer under the laws of the State of Minnesota.

Date 2/3/2016 BRIAN L. LARSON, P.E. Lic. No. 45850

DESIGN BY BML
DRAWN BY BML
CHECKED BY RJW

Hakanson Anderson
Civil Engineers and Land Surveyors
3601 Thurston Ave., Anoka, Minnesota 55303
763-427-5860 FAX 763-427-0520
www.hakanson-anderson.com

CITY OF Otsego MINNESOTA

GRADING, DRAINAGE, EROSION AND SEDIMENT CONTROL PLAN
80TH STREET NE
CITY OF OTSEGO, MINNESOTA

SHEET 13 OF 28 SHEETS

OT393

Feb 03, 2016 - 12:15pm
G:\Projects\OTSEGO\OT393\Acad\Plans\OT393-GRADING-EROSION-SHEET.dwg

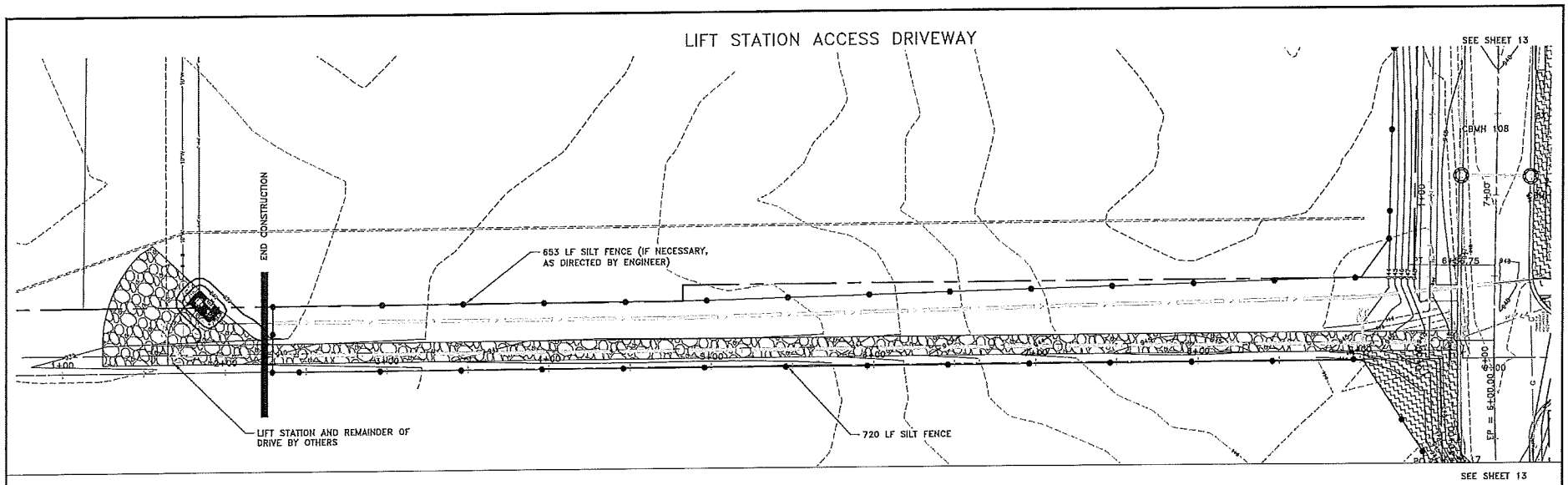

EROSION CONTROL

- PROPOSED BIOROLL
- PROPOSED EROSION CONTROL BLANKET
- PROPOSED SILT FENCE
- PROPOSED INLET PROTECTION
- PROPOSED STABILIZED CONSTRUCTION EXIT
- PROPOSED ARTICULATED BLOCK PER
- TEMPORARY EASEMENT
- PERMANENT EASEMENT

GRADING

- 800 EXISTING INDEX CONTOUR
- 793 EXISTING CONTOUR
- 800 PROPOSED INDEX CONTOUR
- 793 PROPOSED CONTOUR
- 877.0 PROPOSED SPOT ELEVATION
- 841.00 PROPOSED CENTERLINE SPOT ELEVATION
- 1.2% PROPOSED DRAINAGE FLOW
- E.O.F. 930.0 EMERGENCY OVERFLOW
- PROPOSED DRAINAGE ARROW

SCALE 30 0 30 60 IN FEET

GENERAL NOTES:

1. SEE SHEET 9 FOR GENERAL SEDIMENT AND EROSION CONTROL NOTES.
2. ALL DISTURBED AREAS REQUIRE MIN. 12" OF TOPSOIL AND TURF ESTABLISHMENT CONFORMING TO Mn/DOT STANDARD SPECIFICATIONS. AREAS REQUIRING EROSION CONTROL BLANKET, AS NOTED ON THIS SHEET, DO NOT REQUIRE TYPE 1 MULCH.
3. SEE SHEET 2 FOR TYPE AND APPLICATION RATES FOR MULCH, SEED AND FERTILIZER.
4. TYPE 1 MULCH SHALL BE DISK ANCHORED. DISK ANCHORING SHALL BE INCIDENTAL.
5. ALL INLET PROTECTION DEVICES SHALL BE PAID PER ITEM 2573-STORM DRAIN INLET PROTECTION.

REFERENCE NOTES:

(1) PRIOR TO EXPORTING MATERIALS OR DEBRIS, CONTRACTOR SHALL PROVIDE A ROCK ENTRANCE PER STANDARD PLATE 505.

(2) PRIOR TO CURB CONSTRUCTION, INLET PROTECTION SHALL MEET THE REQUIREMENTS OF STANDARD PLAT NO. 506. AFTER CURB CONSTRUCTION, INLET PROTECTION FOR CATCH BASINS SHALL MEET THE REQUIREMENTS OF STANDARD PLATE NO. 507.

DATE	REVISION

I hereby certify that this plan, specification, or report was prepared by me or under my direct supervision and that I am a duly Licensed Professional Engineer under the laws of the State of Minnesota.

BRIAN LARSON, P.E.
Date 2/3/2016 Lic. No. 45850

DESIGNED BY: BWL
DRAWN BY: BWL
CHECKED BY: RJW

Hakanson Anderson
Civil Engineers and Land Surveyors
3601 Thurston Ave., Anoka, Minnesota 55303
763-427-5860 FAX 763-427-0520
www.hakanson-anderson.com

CITY OF Otsego MINNESOTA

GRADING, DRAINAGE, EROSION AND SEDIMENT CONTROL PLAN
80TH STREET NE
CITY OF OTSEGO, MINNESOTA

Feb 02, 2016 - 12:40pm
X:\Work_orders\PROJECTS\MUNICIPAL\OT393\dwg\OT393 GRADING_EROSION_EASEMENTS.dwg

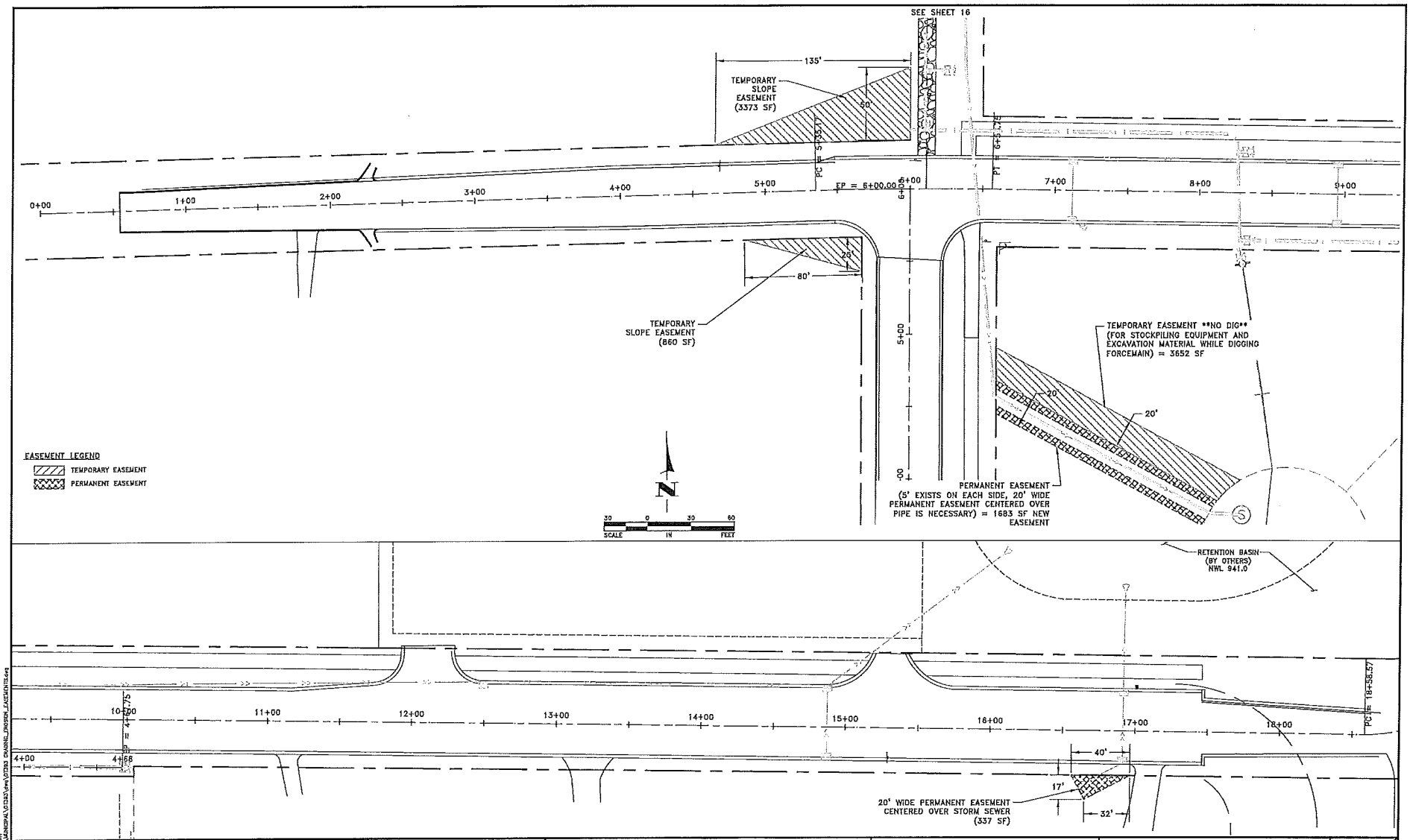

DATE	REVISION

I hereby certify that this plan, specification, or report was prepared by me or under my direct supervision and that I am a duly Licensed Professional Engineer under the laws of the State of Minnesota.

BRETT CARSON, P.E.
Date 2/3/2016 Lic. No. 45850

DRAWN BY: BML
SCAN BY: BML
DESIGN BY: RJW

Hakanson Anderson
Civil Engineers and Land Surveyors
3601 Thurston Ave., Anoka, Minnesota 55303
763-427-5560 FAX 763-427-0520
www.hakanson-anderson.com

CITY OF Otsego MINNESOTA

EASEMENTS

80TH STREET NE
CITY OF OTSEGO, MINNESOTA

SHEET 15 OF 28 SHEETS

OT393

Feb 02, 2016 - 3:30pm
W:\Proj_eng\PROJECTS\MANDRA\OTSEG\dwg\OT393 DRAINS_PROFILE_EASEMENTS.dwg

LIFT STATION ACCESS DRIVEWAY

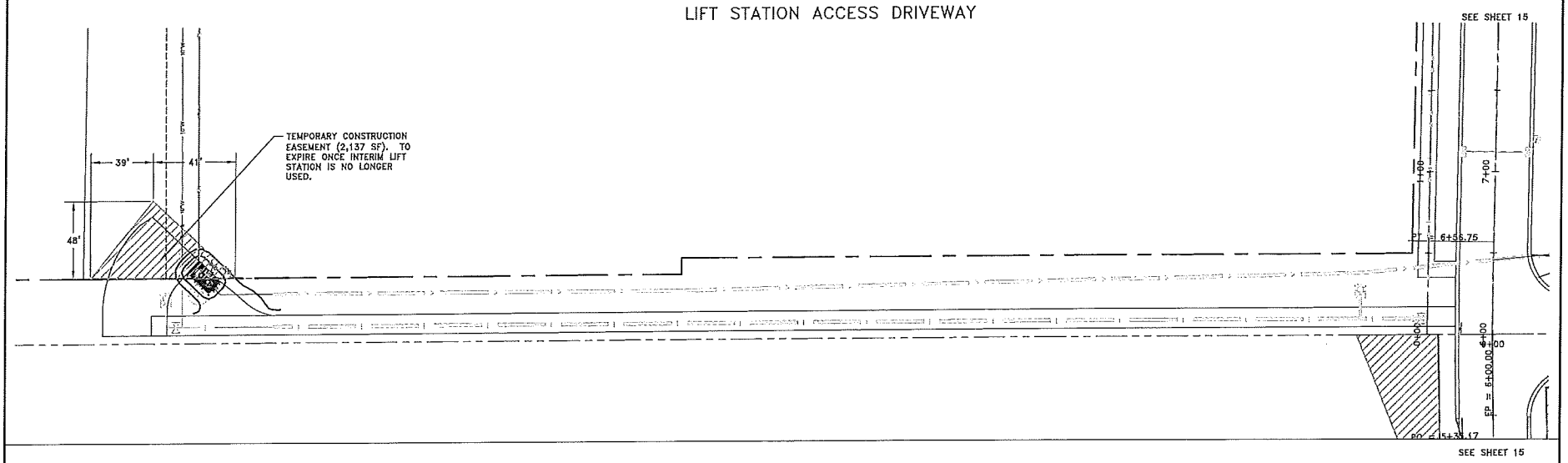

EASEMENT LEGEND

- TEMPORARY EASEMENT
- PERMANENT EASEMENT

SCALE 30 0 30 60 IN FEET

DATE	REVISION

I hereby certify that this plan, specification, or report was prepared by me or under my direct supervision and that I am a duly Licensed Professional Engineer under the laws of the State of Minnesota.

BRIAN LARSON, P.E.
Date 2/3/2016 Lic. No. 45850

DESIGNED: BML
DRAWN: BML
CHECKED: RJW

Hakanson Anderson
Civil Engineers and Land Surveyors
3601 Thurston Ave., Anoka, Minnesota 55303
763-427-5860 FAX 763-427-0520
www.hakanson-anderson.com

CITY OF Otsego MINNESOTA

EASEMENTS
80TH STREET NE
CITY OF OTSEGO, MINNESOTA

SHEET 16 OF 28 SHEETS

OT393

Feb 02, 2016 - 4:09pm
K:\hacd_eng\PROJECTS\USROPA\OT393\dwg\OT393 GRADING_DESIGN_LAYOUTS.dwg

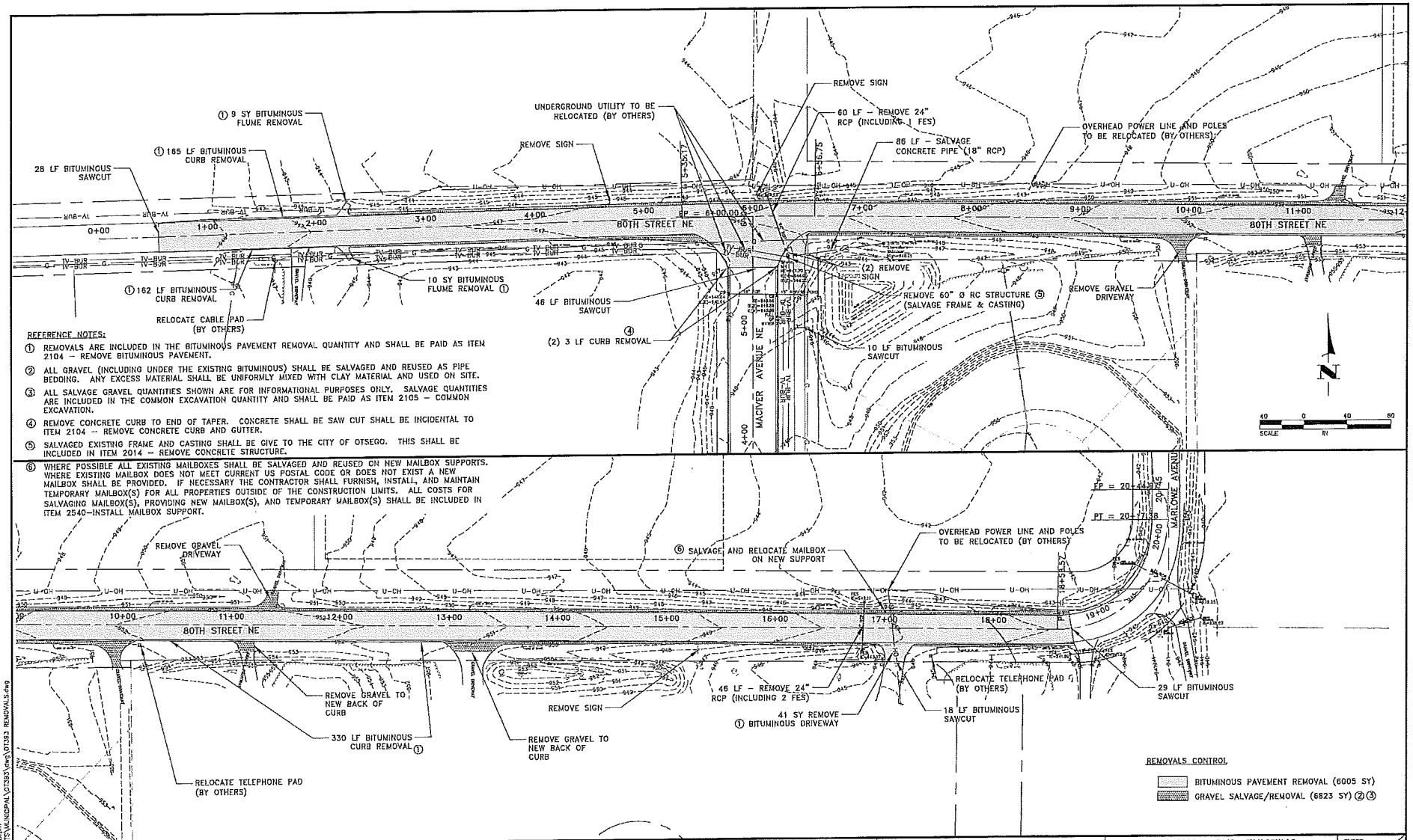

REFERENCE NOTES:

① REMOVALS ARE INCLUDED IN THE BITUMINOUS PAVEMENT REMOVAL QUANTITY AND SHALL BE PAID AS ITEM 2104 – REMOVE BITUMINOUS PAVEMENT.

② ALL GRAVEL (INCLUDING UNDER THE EXISTING BITUMINOUS) SHALL BE SALVAGED AND REUSED AS PIPE BEDDING. ANY EXCESS MATERIAL SHALL BE UNIFORMLY MIXED WITH CLAY MATERIAL AND USED ON SITE.

③ ALL SALVAGE GRAVEL QUANTITIES SHOWN ARE FOR INFORMATIONAL PURPOSES ONLY. SALVAGE QUANTITIES ARE INCLUDED IN THE COMMON EXCAVATION QUANTITY AND SHALL BE PAID AS ITEM 2105 – COMMON EXCAVATION.

④ REMOVE CONCRETE CURB TO END OF TAPER. CONCRETE SHALL BE SAW CUT SHALL BE INCIDENTAL TO ITEM 2104 – REMOVE CONCRETE CURB AND GUTTER.

⑤ SALVAGED EXISTING FRAME AND CASTING SHALL BE GIVE TO THE CITY OF OTSEGO. THIS SHALL BE INCLUDED IN ITEM 2014 – REMOVE CONCRETE STRUCTURE.

⑥ WHERE POSSIBLE ALL EXISTING MAILBOXES SHALL BE SALVAGED AND REUSED ON NEW MAILBOX SUPPORTS. WHERE EXISTING MAILBOX DOES NOT MEET CURRENT US POSTAL CODE OR DOES NOT EXIST A NEW MAILBOX SHALL BE PROVIDED. IF NECESSARY THE CONTRACTOR SHALL FURNISH, INSTALL, AND MAINTAIN TEMPORARY MAILBOX(S) FOR ALL PROPERTIES OUTSIDE OF THE CONSTRUCTION LIMITS. ALL COSTS FOR SALVAGING MAILBOX(S), PROVIDING NEW MAILBOX(S), AND TEMPORARY MAILBOX(S) SHALL BE INCLUDED IN ITEM 2540–INSTALL MAILBOX SUPPORT.

REMOVALS CONTROL

BITUMINOUS PAVEMENT REMOVAL (6005 SY)

GRAVEL SALVAGE/REMOVAL (6823 SY) ②③

DATE	REVISION

I hereby certify that this plan, specification, or report was prepared by me or under my direct supervision and that I am a duly Licensed Professional Engineer under the laws of the State of Minnesota.

BRENT LARSON, P.E. Lic. No. 45850
Date 2/3/16

DESIGNED BY: BML
DRAWN BY: EDP
CHECKED BY: RJW

Hakanson Anderson
Civil Engineers and Land Surveyors
3601 Thurston Ave., Anoka, Minnesota 55303
763-427-5860 FAX 763-427-0520
www.hakanson-anderson.com

CITY OF Otsego MINNESOTA

REMOVALS AND EXISTING CONDITIONS PLAN
80TH STREET NE
CITY OF OTSEGO, MINNESOTA

SHEET 17 OF 28 SHEETS

OT393

Feb 02, 2016 – 4:31pm
K:\and_eng\PROJECTS\MUNICIPAL\OT393\dwg\OT393 REMOVALS.dwg

SEE SHEET 21

REFERENCE NOTES:
1. BACK OF CURB SHALL BE KNOCKED DOWN AT ALL FIELD AND DRIVEWAY ACCESSES.
2. IT SHALL BE THE CONTRACTORS RESPONSIBILITY TO MATCH THE EXISTING TYPE OF MATERIAL OF EACH DRIVEWAY. ALL MATERIAL AND WORK NECESSARY TO REPAIR AND MATCH THE EXISTING DRIVEWAY TO THE NEW ROAD SHALL BE INCLUDED IN AND PAID AS ITEM 2211-AGGREGATE BASE CLASS 2 SHOULDER.

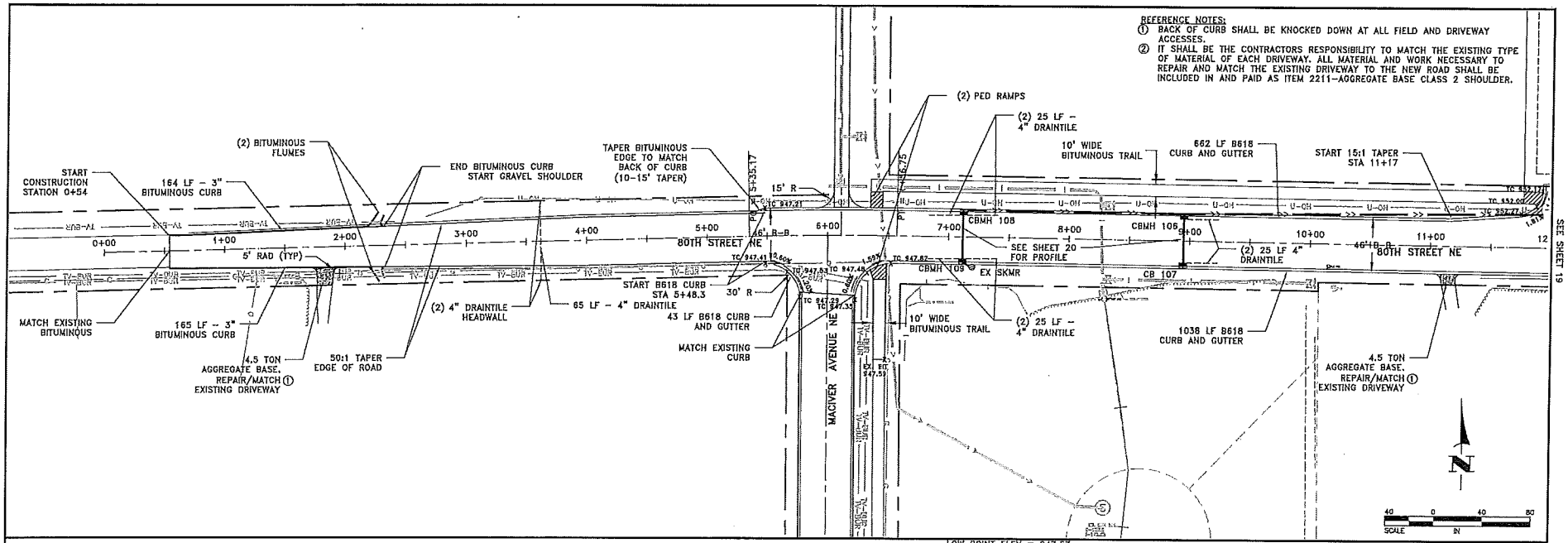

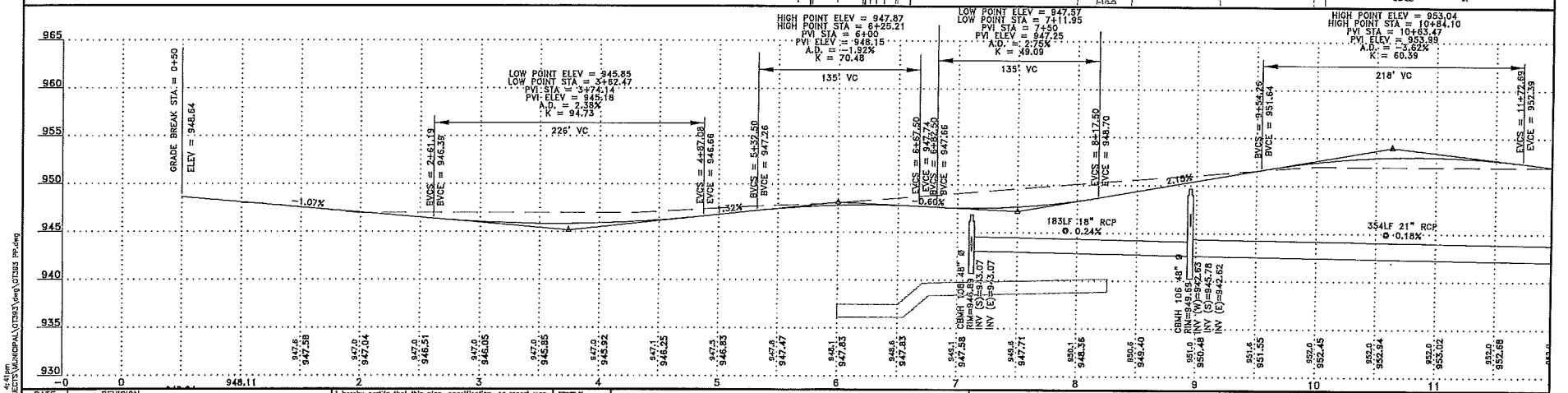

DATE	REVISION

I hereby certify that this plan, specification, or report was prepared by me or under my direct supervision and that I am a duly Licensed Professional Engineer under the laws of the State of Minnesota.

BRENT LARSON, P.E. Date 2/3/16 Lic. No. 45850

DESIGNED BY: BML
DRAWN BY: EDP
CHECKED BY: RJW

Hakanson Anderson
Civil Engineers and Land Surveyors
3601 Thurston Ave., Anoka, Minnesota 55303
763-427-5860 FAX 763-427-0520
www.hakanson-anderson.com

CITY OF Otsego MINNESOTA

STREET AND STORM SEWER PLANS AND PROFILE
80TH STREET NE
CITY OF OTSEGO, MINNESOTA

SHEET 18 OF 28 SHEETS

OT393

Feb 02, 2018 - 4:41pm
N:\and_eng\PROJECTS\MUNICIPAL\OT393\dwg\OT393 PP.dwg

REFERENCE NOTES:
① BACK OF CURB SHALL BE KNOCKED DOWN AT ALL FIELD AND DRIVEWAY ACCESSES.
② IT SHALL BE THE CONTRACTORS RESPONSIBILITY TO MATCH THE EXISTING TYPE OF MATERIAL OF EACH DRIVEWAY. ALL MATERIAL AND WORK NECESSARY TO REPAIR AND MATCH THE EXISTING DRIVEWAY TO THE NEW ROAD SHALL BE INCLUDED IN AND PAID AS ITEM 2211-AGGREGATE BASE CLASS 2 SHOULDER.
③ BITUMINOUS DRIVEWAY AND TRAIL SHALL BE PAID AS ITEM 2360 – TYPE SP 12.5 WEARING COURSE MIXTURE (3,C) (TRAIL). 6" OF CLASS 5 SHALL BE PLACED AND COMPACTED IN BELOW ALL BITUMINOUS DRIVEWAYS. THIS AGGREGATE SHALL BE PAID AS ITEM 2211 – AGGREGATE BASE CLASS 5 MOD.

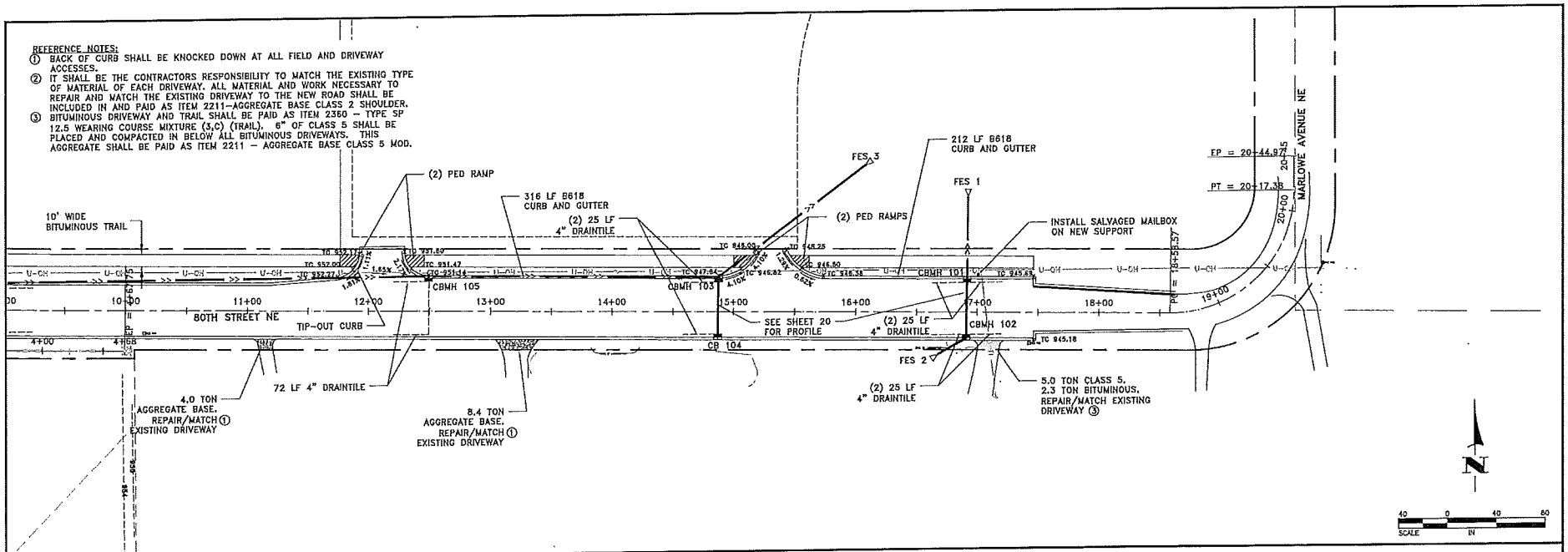

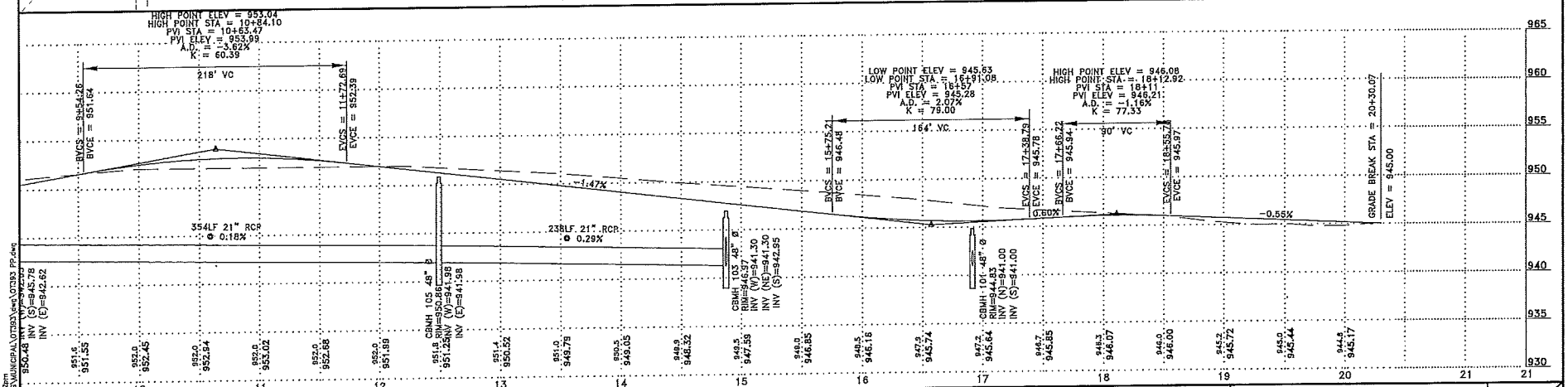

DATE	REVISION

I hereby certify that this plan, specification, or report was prepared by me or under my direct supervision and that I am a duly Licensed Professional Engineer under the laws of the State of Minnesota.

BRENT LARSON, P.E. Lic. No. 45850
Date 2/3/16

DESIGNED BY: BML
DRAWN BY: EDP
CHECKED BY: RJW

Hakanson Anderson
Civil Engineers and Land Surveyors
3601 Thurston Ave., Anoka, Minnesota 55303
763-427-5860 FAX 763-427-0520
www.hakanson-anderson.com

CITY OF Otsego MINNESOTA

STREET AND STORM SEWER PLANS AND PROFILE
80TH STREET NE
CITY OF OTSEGO, MINNESOTA

SHEET 19 OF 28 SHEETS

OT393

Feb 02, 2016 – 4:42pm
K:\Civil_Eng\PROJECTS\MUNICIPAL\OT393\Dwg\OT393_PP.dwg

CBMH 109 TO CBMH 108

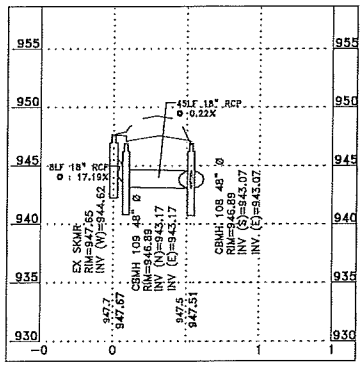

CB 107 TO CBMH 106

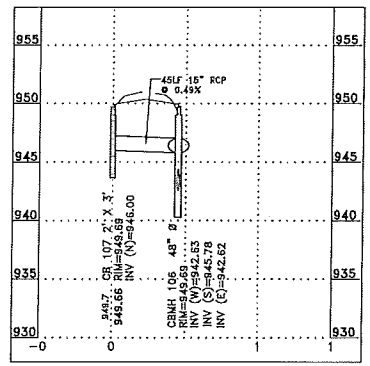

CB 104 TO FES 3

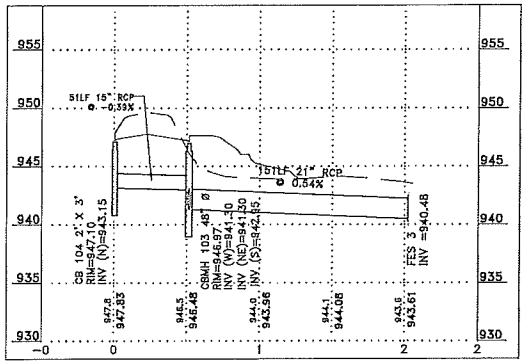

FES 2 TO FES 1

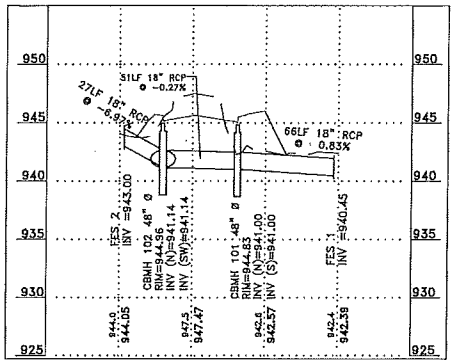

DATE	REVISION

I hereby certify that this plan, specification, or report was prepared by me or under my direct supervision and that I am a duly Licensed Professional Engineer under the laws of the State of Minnesota.

BRENT LARSON, P.E.
Date 2/3/16 Lic. No. 45850

DESIGNED: BML
DRAWN: EDP
CHECKED: RJW

Hakanson Anderson
Civil Engineers and Land Surveyors
3601 Thurston Ave., Anoka, Minnesota 55303
763-427-5860 FAX 763-427-0520
www.hakanson-anderson.com

CITY OF Otsego MINNESOTA

STREET AND STORM SEWER
PLANS AND PROFILE
80TH STREET NE
CITY OF OTSEGO, MINNESOTA

SHEET 20 OF 28 SHEETS

OT393

Feb 02, 2016 – 4:48pm
K:\ved_eng\PROJECTS\MUNICIPAL\OT393\dwg\OT393 PP.dwg

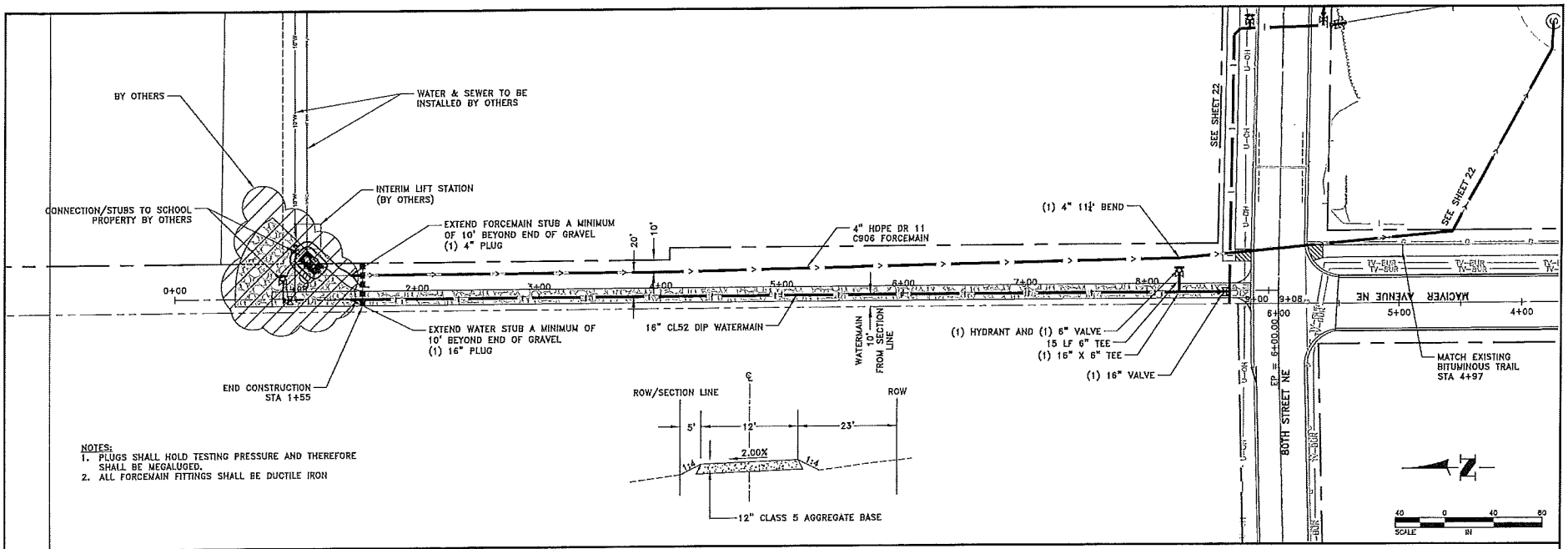

NOTES:
1. PLUGS SHALL HOLD TESTING PRESSURE AND THEREFORE SHALL BE MEGALUGED.
2. ALL FORCEMAIN FITTINGS SHALL BE DUCTILE IRON

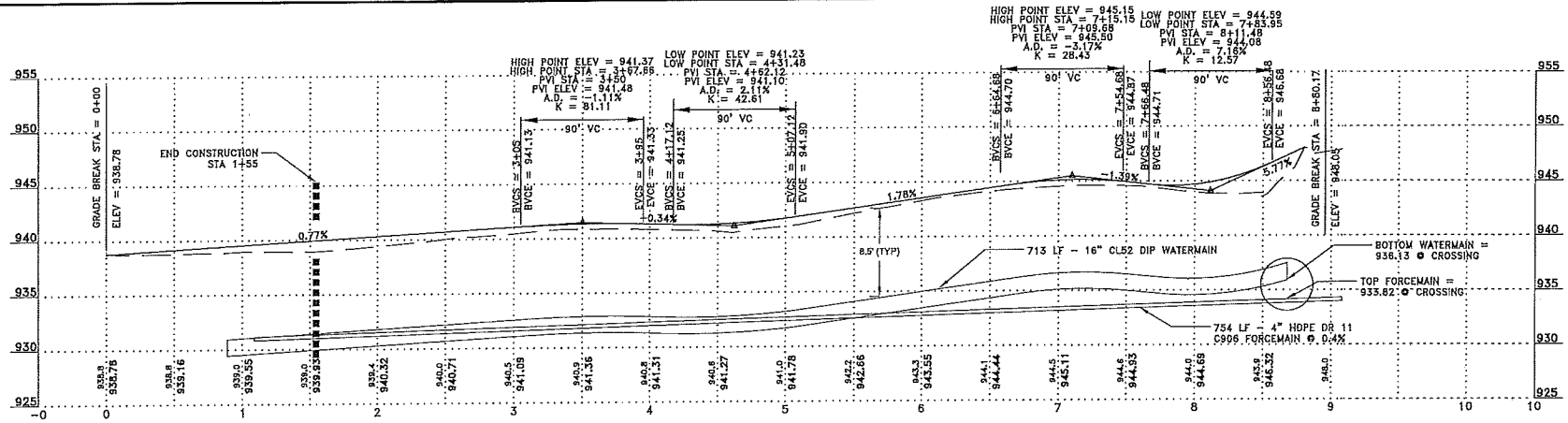

DATE	REVISION

I hereby certify that this plan, specification, or report was prepared by me or under my direct supervision and that I am a duly Licensed Professional Engineer under the laws of the State of Minnesota.

Date 2/3/16 BRENT LARSON, P.E. Lic. No. 45850

DRAWN BY: BML
REVIEWED BY: EDP
CHECKED BY: RJW

Hakanson Anderson
Civil Engineers and Land Surveyors
3601 Thurston Ave., Anoka, Minnesota 55303
763-427-5860 FAX 763-427-0520
www.hakanson-anderson.com

CITY OF Otsego MINNESOTA

WATERMAIN, FORCEMAIN, AND DRIVEWAY PLANS AND PROFILE

CITY OF OTSEGO, MINNESOTA

SHEET 21 OF 28 SHEETS

OT393

Feb 03, 2016 - 10:18am
K:\civil_eng\PROJECTS\MUNICIPAL\OT393\dwg\OT393 PP.dwg

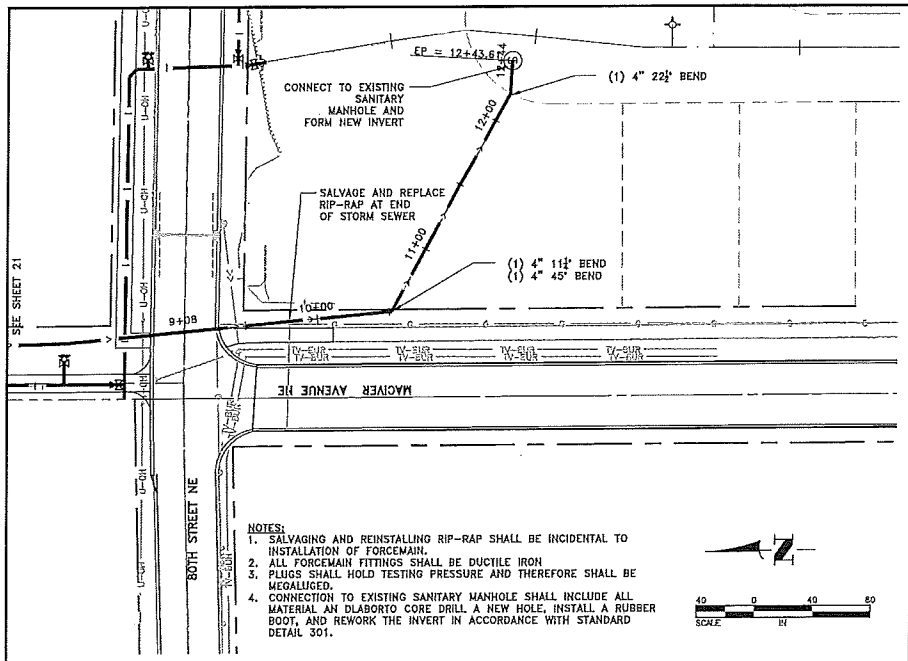

NOTES:
1. SALVAGING AND REINSTALLING RIP-RAP SHALL BE INCIDENTAL TO INSTALLATION OF FORCEMAIN.
2. ALL FORCEMAIN FITTINGS SHALL BE DUCTILE IRON
3. PLUGS SHALL HOLD TESTING PRESSURE AND THEREFORE SHALL BE MEGALIGED.
4. CONNECTION TO EXISTING SANITARY MANHOLE SHALL INCLUDE ALL MATERIAL AN DLABORTO CORE DRILL A NEW HOLE, INSTALL A RUBBER BOOT, AND REWORK THE INVERT IN ACCORDANCE WITH STANDARD DETAIL 301.

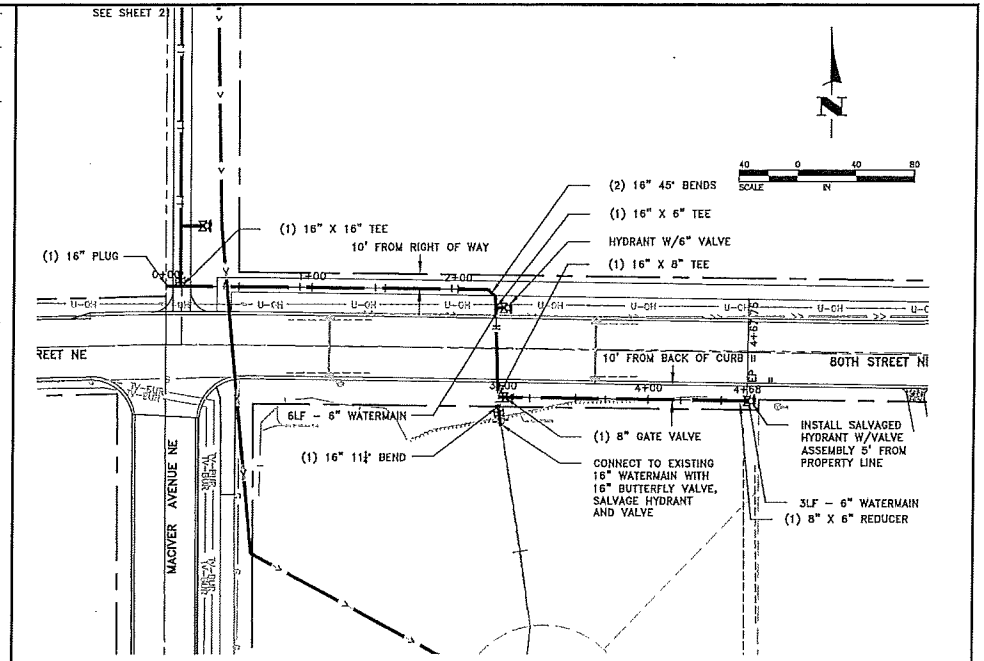

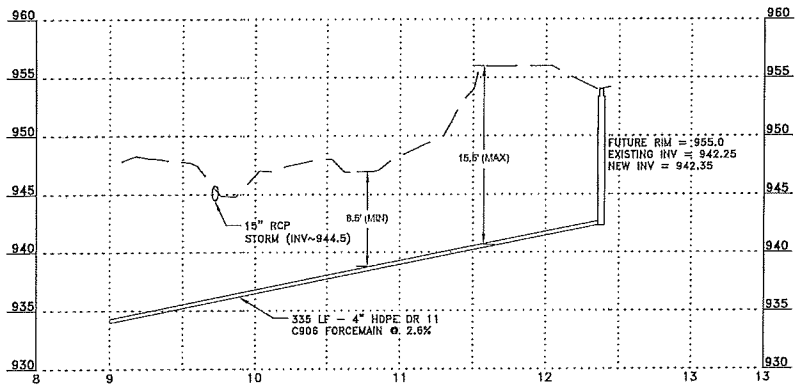

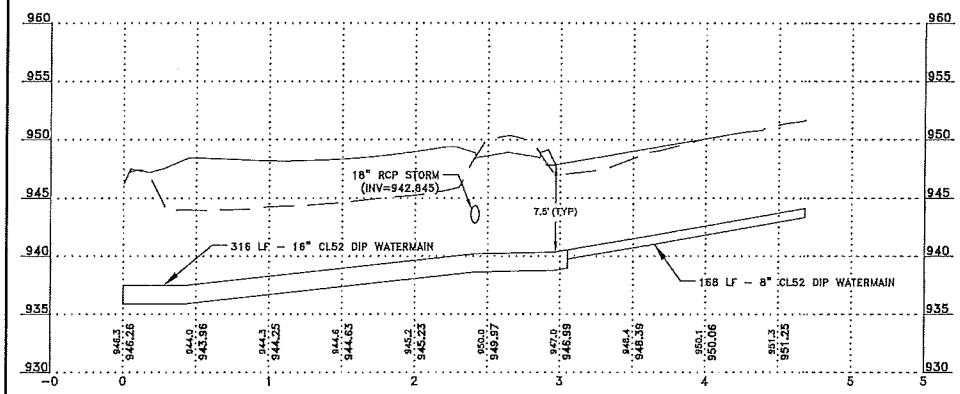

DATE	REVISION

I hereby certify that this plan, specification, or report was prepared by me or under my direct supervision and that I am a duly Licensed Professional Engineer under the laws of the State of Minnesota.

BRENT LARSON, P.E.
Date 2/3/16 Lic. No. 45850

DRAWN BY: BML
DESIGN BY: EDP
CHECKED BY: RJW

Hakanson Anderson
Civil Engineers and Land Surveyors
3601 Thurston Ave., Anoka, Minnesota 55303
763-427-5860 FAX 763-427-0520
www.hakanson-anderson.com

CITY OF Otsego MINNESOTA

WATER AND SANITARY FORCEMAIN PLANS AND PROFILE

CITY OF OTSEGO, MINNESOTA

SHEET 22 OF 28 SHEETS

OT393

Feb 03, 2016 - 10:27am
K:\and_eng\PROJECTS\MUNICIPAL\OT393\dwg\OT393 PP.dwg

PAVEMENT MARKING LEGEND	LINE WIDTH (INCHES)	LINE COMPOSITION AND COLOR	PAVEMENT MARKING LEGEND	LINE WIDTH (INCHES)	LINE COMPOSITION AND COLOR	PAVEMENT MARKING LEGEND	LINE WIDTH (INCHES)	LINE COMPOSITION AND COLOR
1	4"	SINGLE SOLID WHITE – PAINT	5	VARIES	LEFT TURN ARROW (PAINT)	9	3'x6'	CROSSWALK BLOCKS WHITE – PAINT
2	24"	SINGLE SOLID YELLOW – PAINT	6	VARIES	STRAIGHT ARROW (PAINT)	10	12"	SOLID CROSSWALK LINE WHITE – PAINT
3	4"	DOUBLE SOLID YELLOW – PAINT	7	VARIES	RIGHT TURN ARROW (PAINT)			
4	8"	SINGLE BROKEN WHITE – PAINT	8	24"	STOP BAR WHITE – PAINT			

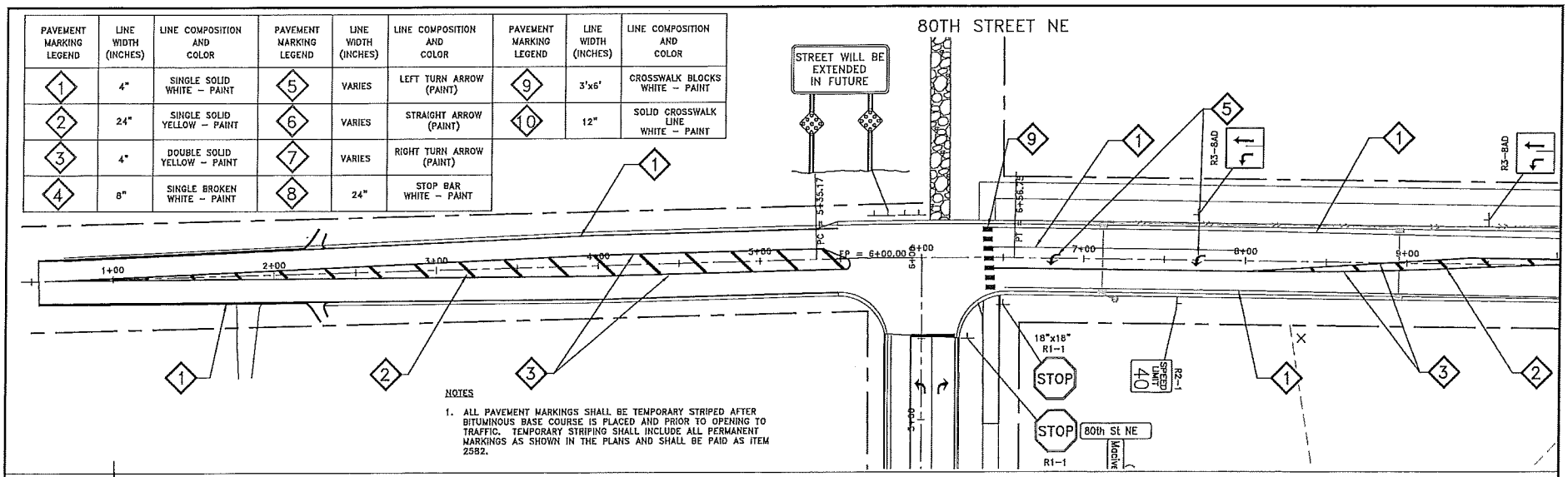

NOTES

1. ALL PAVEMENT MARKINGS SHALL BE TEMPORARY STRIPED AFTER BITUMINOUS BASE COURSE IS PLACED AND PRIOR TO OPENING TO TRAFFIC. TEMPORARY STRIPING SHALL INCLUDE ALL PERMANENT MARKINGS AS SHOWN IN THE PLANS AND SHALL BE PAID AS ITEM 2582.

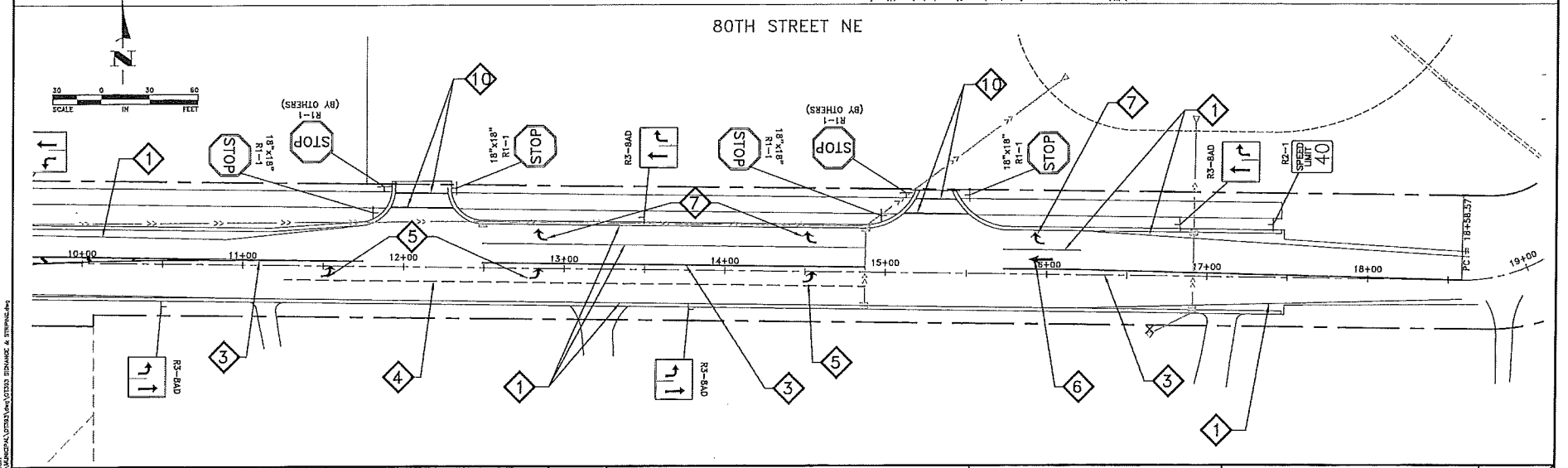

DATE	REVISION

I hereby certify that this plan, specification, or report was prepared by me or under my direct supervision and that I am a duly Licensed Professional Engineer under the laws of the State of Minnesota.

BRENT LARSON, P.E.
Date 1/6/2016 Lic. No. 45850

DESIGNED BY: BML
DRAWN BY: BML
CHECKED BY: RJW

Hakanson Anderson
Civil Engineers and Land Surveyors
3601 Thurston Ave., Anoka, Minnesota 55303
763-427-5860 FAX 763-427-0520
www.hakanson-anderson.com

CITY OF Otsego MINNESOTA

SIGNAGE AND STRIPING PLAN
80TH STREET NE
CITY OF OTSEGO, MINNESOTA

SHEET 23 OF 28 SHEETS

OT393

Feb 03, 2016 – 10:39am
X:\Proj_eng\PROJECTS\OTSEGO\OT393 SIGNAGE & STRIPING.dwg

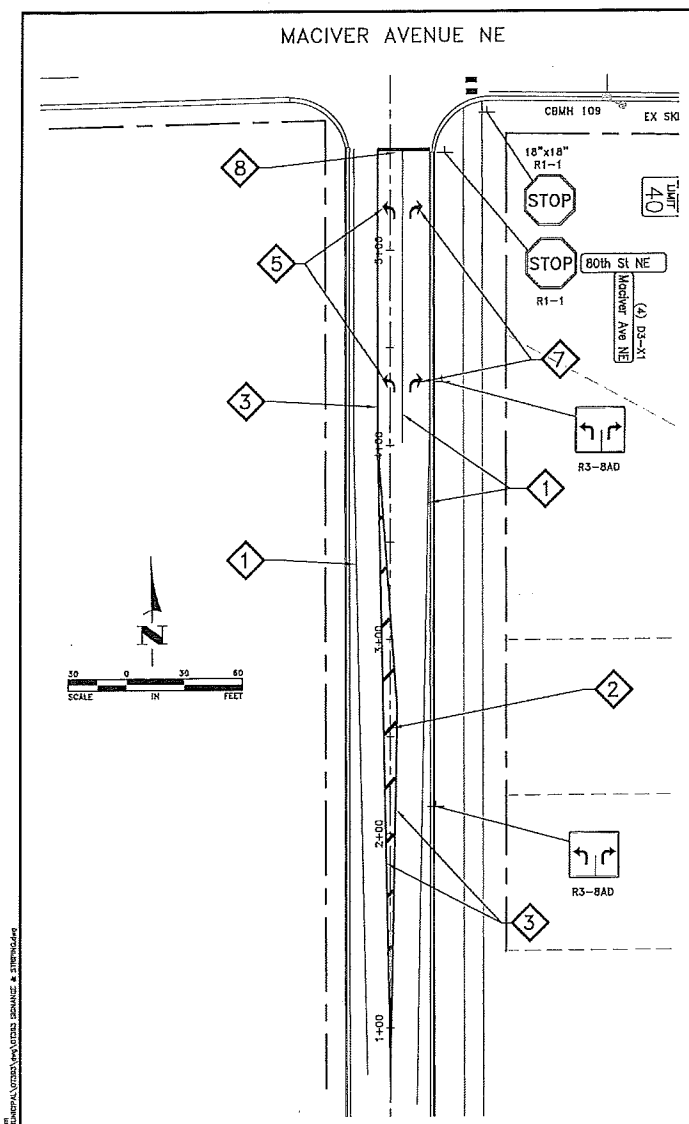

PAVEMENT MARKING LEGEND	LINE WIDTH (INCHES)	LINE COMPOSITION AND COLOR	PAVEMENT MARKING LEGEND	LINE WIDTH (INCHES)	LINE COMPOSITION AND COLOR	PAVEMENT MARKING LEGEND	LINE WIDTH (INCHES)	LINE COMPOSITION AND COLOR
1	4"	SINGLE SOLID WHITE – PAINT	5	VARIES	LEFT TURN ARROW (PAINT)	9	3'x6'	CROSSWALK BLOCKS WHITE – PAINT
2	24"	SINGLE SOLID YELLOW – PAINT	6	VARIES	STRAIGHT ARROW (PAINT)	10	12"	SOLID CROSSWALK LINE WHITE – PAINT
3	4"	DOUBLE SOLID YELLOW – PAINT	7	VARIES	RIGHT TURN ARROW (PAINT)			
4	8"	SINGLE BROKEN WHITE – PAINT	8	24"	STOP BAR WHITE – PAINT			

NOTES

1. ALL PAVEMENT MARKINGS SHALL BE TEMPORARY STRIPED AFTER BITUMINOUS BASE COURSE IS PLACED AND PRIOR TO OPENING TO TRAFFIC. TEMPORARY STRIPING SHALL INCLUDE ALL PERMANENT MARKINGS AS SHOWN IN THE PLANS AND SHALL BE PAID AS ITEM 2582.

DATE	REVISION

I hereby certify that this plan, specification, or report was prepared by me or under my direct supervision and that I am a duly Licensed Professional Engineer under the laws of the State of Minnesota.

BRENT LARSON, P.E.
Date 1/6/2016 Lic. No. 45850

DESIGNED BY: BML
DRAWN BY: BML
CHECKED BY: RJW

Hakanson Anderson
Civil Engineers and Land Surveyors
3601 Thurston Ave., Anoka, Minnesota 55303
763-427-5860 FAX 763-427-0520
www.hakanson-anderson.com

CITY OF Otsego MINNESOTA

SIGNAGE AND STRIPING PLAN
80TH STREET NE
CITY OF OTSEGO, MINNESOTA

SHEET 24 OF 28 SHEETS

OT393

Feb 03, 2016 - 10:09am
K:\Projects\OTSEGO\MUNICIPAL\OT393\dwg\OT393 SIGNAGE & STRIPING.dwg

SIGN LEGEND	SIGN NUMBER	SIGN SIZE	SIGN DESCRIPTION	SIGN COLOR ③	POSTS: NUMBER AND TYPE ④	POSTS: NUMBER OF KNEE BRACES	POSTS: LENGTH (FEET) ⑦	ESTIMATED QUANTITY: #	ESTIMATED QUANTITY: SQ.FT.
STOP	R1-1	30"X30"	STOP		1-S		12	1	6.25
STOP	R1-1	18"X18"	STOP		1-S		7.5	5	11.25
SPEED LIMIT 40	R2-1	24"X30"	SPEED LIMIT 40		1-S		12	2	10
	R3-8AC	36"X30"	LANE DESIGNATION		2-S		12	4	30
	R3-8CA	36"X30"	LANE DESIGNATION		2-S		12	2	15
	R3-8AA	36"X30"	LANE DESIGNATION		2-S		12	2	15
STREET WILL BE EXTENDED IN FUTURE	N/A CUSTOM	30"x 60"		WHITE ON GREEN	SEE 2/27			1	12.5
	X4-11	18"X18"		RED ON BLACK				4	9
×	STD. PLATE 8150C		CULVERT MARKER		1-B		8	2	⑤
	1	48 X 9" 30 X 9"	SEE 1/27	WHITE ON GREEN	⑨	SEE STD PLATE 805		4	9.75 ⑦

PAVEMENT MARKING LEGEND	LINE TYPE	LINE WIDTH (INCHES)	LINE COMPOSITION AND COLOR	ESTIMATED QUANTITIES ② (UNIT)
1	TURN LANE LINE /PAVEMENT EDGE LINE	4"	SINGLE SOLID WHITE – PAINT	4,797 (LIN. FT)
2	HATCHING	24"	SINGLE SOLID YELLOW – PAINT	288 (LIN. FT)
3	CENTER LINE	4"	DOUBLE SOLID ① YELLOW – PAINT	6,240 (LIN. FT)
4	LANE LINE	4"	SINGLE BROKEN WHITE – PAINT	361 (LIN. FT)
5	LEFT TURN ARROW	VARIES	SOLID WHITE PAINT	7 (EACH)
6	STRAIGHT ARROW	VARIES	SOLID WHITE PAINT	1 (EACH)
7	RIGHT TURN ARROW	VARIES	SOLID WHITE PAINT	5 (EACH)
8	STOP BAR	24"	SOLID WHITE PAINT	27 (LIN. FT)
9	CROSSWALK BLOCKS	3'X6'	SOLID WHITE PAINT	126 (SQ. FT)
10	CROSSWALK LINE	12"	SOLID WHITE PAINT	138 (LIN. FT)

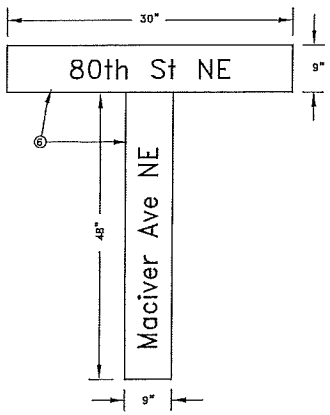

1/27 MACIVER AVENUE STREET NAME DETAIL
NO SCALE

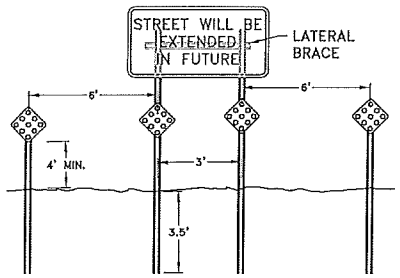

2/27 TYPICAL SIGN LAYOUT FOR END OF STREETS BARRICADES
NO SCALE

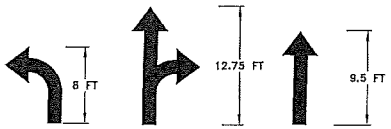

3/27 PAVEMENT ARROW MARKINGS
NO SCALE

REFENENCE NOTES:

① 4" SEPARATION BETWEEN SOLID DOUBLE YELLOW CENTERLINE LINES.
② PAVEMENT MARKINGS SHALL BE PAID PER ITEM 2582.
③ SIGN COLOR SHALL BE AS SHOWN IN THE MnDOT STANDARD SIGNS SUMMARY, UNLESS NOTED.
④ S=VERTICAL SQUARE TUBE POST OR U=VERTICAL U-POST OR B=GUIDE POST TYPE B.
⑤ POST SHALL BE "GUIDE POST TYPE B" AND SHALL BE PAINTED PER MNDOT STANDARD PLATE 8150C. ALL COST ASSOCIATED SHALL BE INCLUDED IN ITEM 2501.573 INSTALL CULVERT MARKER.
⑥ STREET NAME SIGNS SHALL BE 8", SERIES B LETTERING AND NUMBERING.
⑦ STREET NAMES SIGNS CONSIST OF 2 SEPERATE PLATES PER STREET NAME.
⑧ MOUNTING HEIGHT SHALL BE 6.0 FEET TO BOTTOM OF SIGN TO EDGE OF ROAD UNLESS PEDESTRIANS WOULD BE PRESENT, THEN THE SIGN MOUNTING HEIGHT SHALL BE 7.0 FEET.
⑨ SIGN PLATE IS MOUNTED ON POST(S) WITH OTHER SIGNS.

GENERAL NOTES:

1. ALL TRAFFIC CONTROL DEVICES SHALL CONFORM TO THE LATEST EDITION OF THE MINNESOTA MANUAL ON UNIFORM TRAFFIC CONTOL DEVICES, INCLUDING THE LATEST FIELD MANUAL FOR TEMPORARY TRAFFIC CONTROL ZONE LAYOUTS.
2. ALL LETTERING AND NUMBERING SHALL BE SERIES B, UNLESS OTHERWISE NOTED.
3. SIGN PLATES SHALL BE SINGLE FACED, CONSTRUCTED OF 0.100 ALUMINUM AND SHALL HAVE ASTM TYPE XI SHEETING.
4. ALL SIGNS SHALL BE PAID PER ITEM 2564.531-SIGN PANELS TYPE C, UNLESS NOTED.
5. ALL PAVEMENT MARKINGS SHALL BE TEMPORARY STRIPED AFTER BITUMINOUS BASE COURSE IS PLACED AND PRIOR TO OPENING TO TRAFFIC. TEMPORARY STRIPING SHALL INCLUDE ALL PERMANENT MARKINGS AS SHOWN IN THE PLANS AND SHALL BE PAID AS ITEM 2582.

DATE	REVISION

I hereby certify that this plan, specification, or report was prepared by me or under my direct supervision and that I am a duly Licensed Professional Engineer under the laws of the State of Minnesota.

BRENT LARSON, P.E.
Date 1/6/2016 Lic. No. 45850

DESIGNED BY: BML
DRAWN BY: BML
CHECKED BY: RJW

Hakanson Anderson
Civil Engineers and Land Surveyors
3601 Thurston Ave., Anoka, Minnesota 55303
763-427-5860 FAX 763-427-0520
www.hakanson-anderson.com

CITY OF Otsego MINNESOTA

SIGNAGE AND STRIPING TABULATION AND DETAILS
80TH STREET NE
CITY OF OTSEGO, MINNESOTA

OT393

Feb 03, 2016 - 10:43am
K:\proj_arch\PROJECTS\MUNICIPAL\OTSEGO\dwg\OT393 SIGNAGE & STRIPING.dwg

TYPE C & D POST

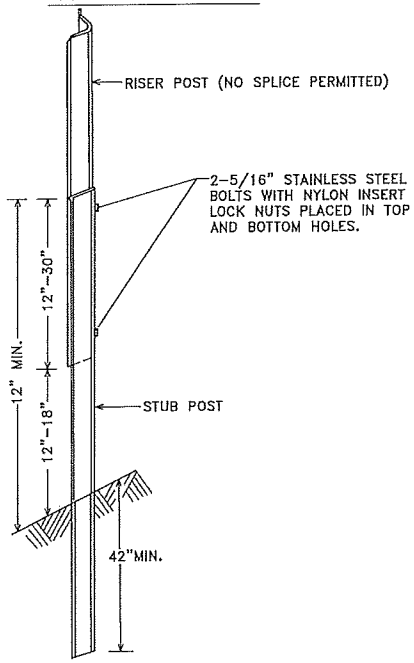

U POST BREAKAWAY SPLICE

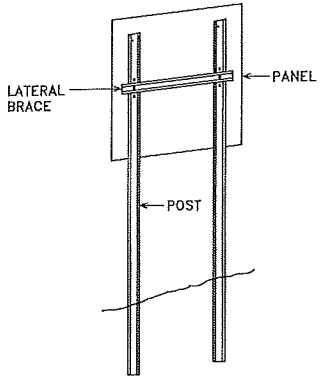

TYPICAL TYPE C INSTALLATION

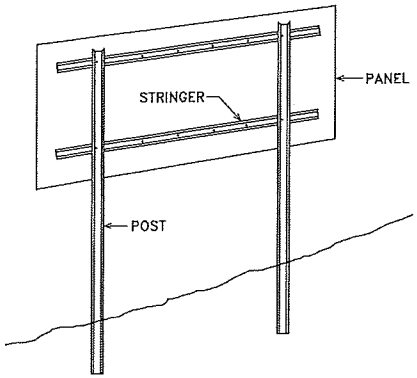

TYPICAL TYPE D INSTALLATION

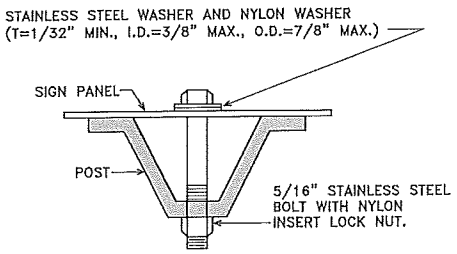

U POST MOUNTING
TYPE C SIGNS

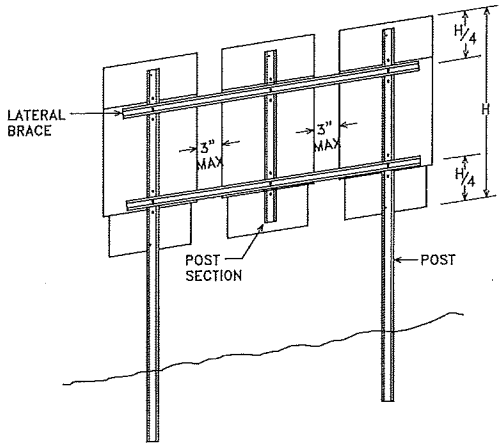

MODIFIED TYPE C INSTALLATION

NOTES:

1. USE 3 LB/FT STUB POSTS. SHALL CONFORM TO MN/DOT 3401.
2. USE 2.5 LB/FT RISER POSTS, STRINGERS, KNEE BRACES AND LATERAL BRACES. ALL SHALL CONFORM TO MNDOT 3401.
3. SEE SIGN DATA SHEETS FOR NUMBER OF POSTS, KNEE BRACES, POST LENGTHS AND SPACINGS, AS DETERMINED FROM TEM CHARTS 6.3 AND 6.4.
4. IF MORE THAN TWO POSTS ARE NEEDED, THE MINIMUM SPACING SHALL BE 45" BETWEEN POSTS.
5. TYPE D SIGN PANELS SHALL BE BOLTED TO STRINGERS AT 24" MAXIMUM INTERVALS IN ACCORDANCE WITH THE TYPE D STRINGER AND PANEL-JOINT DETAIL (SEE STANDARD SIGNS MANUAL).
6. MOUNTING (PUNCH CODE) FOR TYPE C SIGN PANELS SHALL BE AS INDICATED IN THE STANDARD SIGNS MANUAL UNLESS OTHERWISE SPECIFIED.
7. ALL RISER (VERTICAL) U POSTS SHALL BE SPLICED. DRIVEN STUB POSTS SHALL BE AT LEAST 7' LONG.
8. USE STAINLESS STEEL 5/16" BOLTS, WASHERS AND NYLON INSERT LOCK NUTS AS SHOWN FOR ALL GROUND MOUNTED AND OVERHEAD MOUNTED SIGNS.
9. STAINLESS STEEL WASHER WITH SAME DIMENSIONS SHALL BE PROVIDED BETWEEN ALL NYLON WASHERS AND BOLT HEADS.
10. BRACING STUBS SHALL BE NO MORE THAN 4" ABOVE GROUND AND EMBEDDED AT LEAST 42".
11. A-FRAME BRACKET SHALL BE STEEL CONFORMING TO MN/DOT 3306 AND GALVANIZED IN ACCORDANCE WITH MN/DOT 3394.
12. COLLARS SHALL BE USED TO SHIM OVERLAYS AND DEMOUNTABLE LEGEND AWAY FROM PANEL WHERE LEGEND COMPONENTS AWAY FROM PANEL WHERE INTERFERENCE WITH BOLT HEADS IS ENCOUNTERED. MN/DOT 3352.2A6.
13. 2 POST TYPE C SIGNS SHALL BE REINFORCED WITH AT LEAST ONE LATERAL BRACE. INSTALLATIONS WHERE THE TOTAL PANEL HEIGHT IS 60" OR MORE SHALL HAVE TWO LATERAL BRACES LOCATED APPROXIMATELY AT THE QUARTER POINTS.
14. WHERE 2 SINGLE POST TYPE C SIGNS ARE INSTALLED SIDE BY SIDE, THEY SHALL BE REINFORCED LATERALLY BY AT LEAST 2 BRACES, BOLTED AT EACH POST AND LOCATED APPROXIMATELY AT THE QUARTER POINTS.
15. WHERE 3 OR MORE TYPE C SIGNS ARE INSTALLED SIDE BY SIDE, THEY SHALL BE REINFORCED LATERALLY BY AT LEAST 2 BRACES, BOLTED AT EACH POST AND POST SECTION AND LOCATED APPROXIMATELY AT THE QUARTER POINTS AS SHOWN IN MODIFIED TYPE C INSTALLATION.

TYPE C & D SIGN

STRUCTURAL DETAILS

Sheet 1 of 3

REVISED: 3-7-2014

Feb 03, 2016 - 10:43am
K:\cad_eng\PROJECTS\MUNICIPAL\01393\dwg\01393 SIGNANGE & STRIPING.dwg

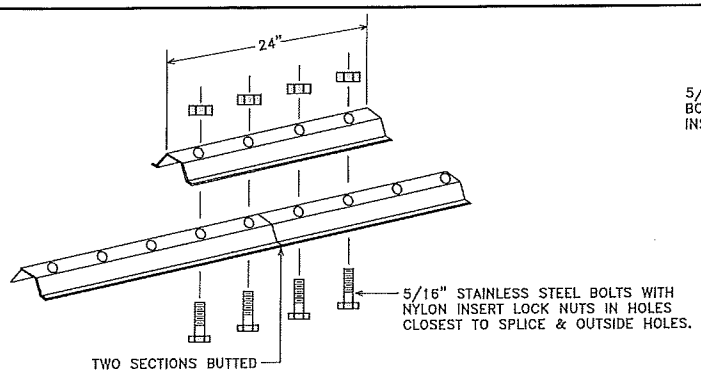

LATERAL BRACE OR STRINGER SPLICE DETAIL (EXPLODED VIEW)

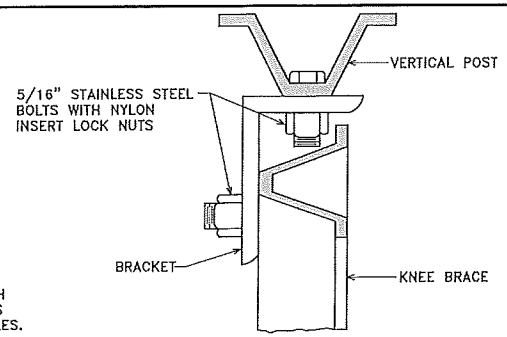

SECTION A–A

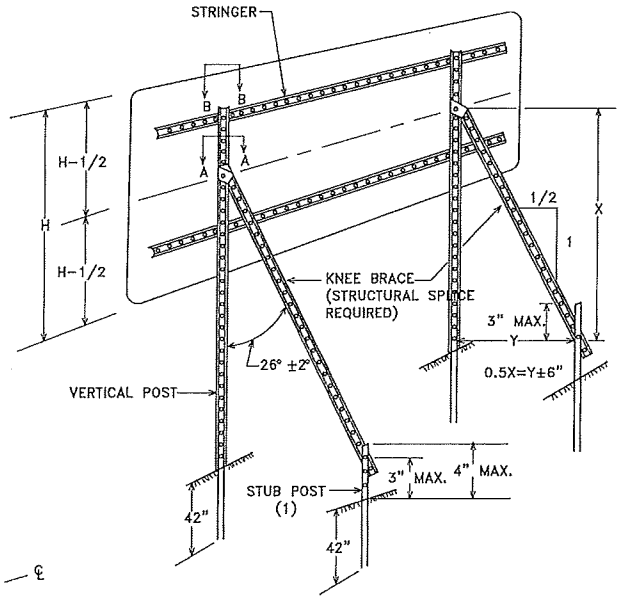

TYPICAL "A–FRAME" INSTALLATION TYPE "D" SIGNS

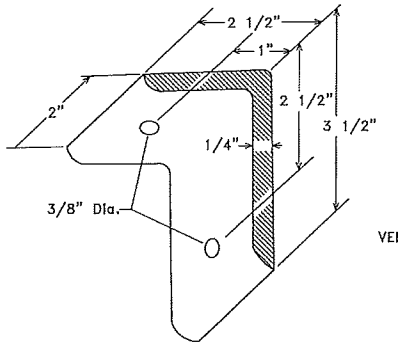

A–FRAME BRACKET

(STEEL MN/DOT 3306 GALVANIZED PER MN/DOT 3394)

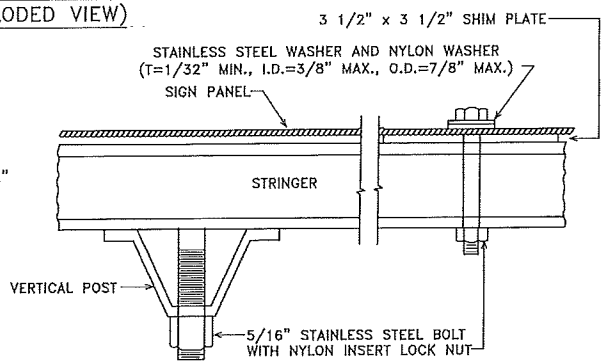

SECTION B–B

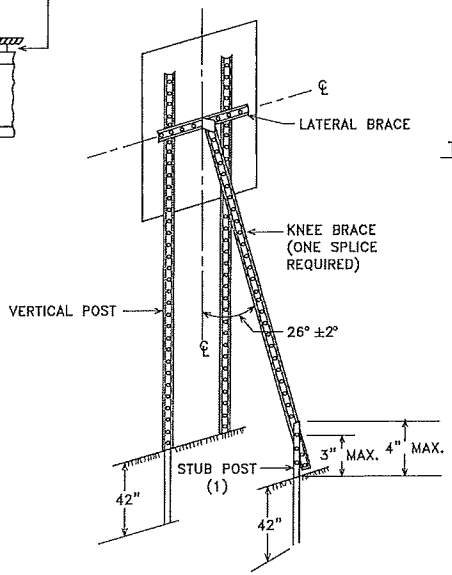

TYPICAL "A–FRAME" INSTALLATION TYPE "C" SIGNS

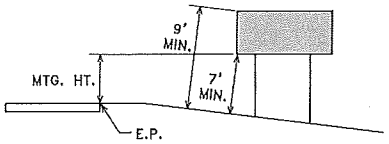

TYPICAL MOUNTING

(1) OFFSET STUB POST 1' TOWARD ROADWAY RELATIVE TO VERTICAL POST. ATTACH STUB POST AND KNEE BRACE BACK TO BACK.

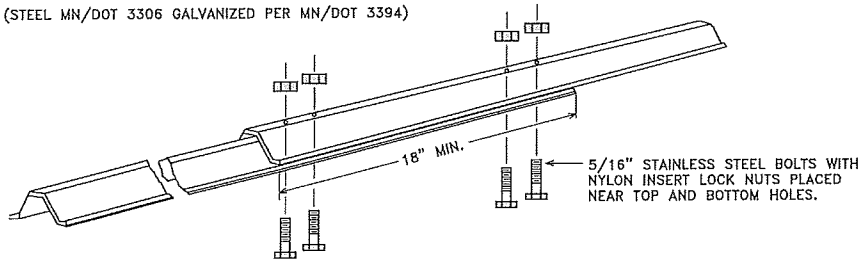

STRUCTURAL SPLICE

(USE WHEN IT IS NECESSARY TO FABRICATE THE CORRECT LENGTH OF POST FROM TWO PIECES)

REVISED: 12-4-2013

TYPE C & D SIGN

STRUCTURAL DETAILS

Sheet 2 of 3

Feb 03, 2016 – 10:43am
K:\cad_eng\PROJECTS\MUNICIPAL\OT393\dwg\OT393 SIGNANGE & STRIPING.dwg

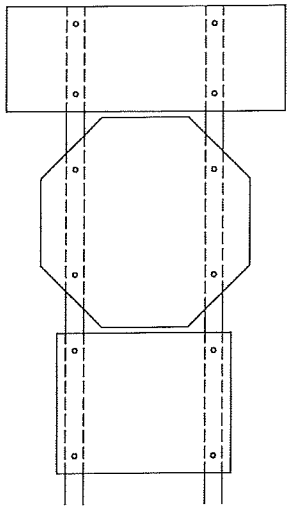

R6-1, R1-1 & (R6-3 OR R6-3a)
MOUNTING

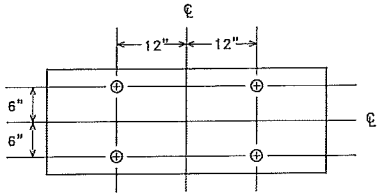

PUNCHING FOR R6-1(54"x18")

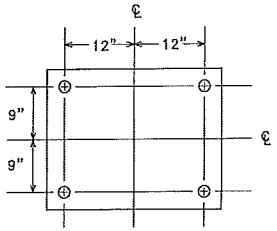

PUNCHING FOR R6-3 OR R6-3a(30"x24")

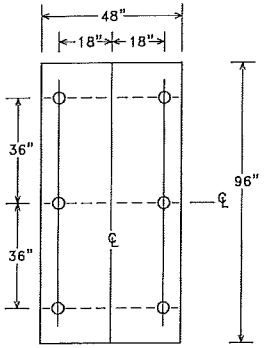

PUNCHING FOR R2-4b
SPEED LIMIT

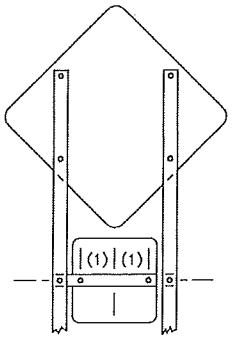

WARNING SIGN [30"X30" OR 48"X48"] AND
WARNING PLAQUE [18"X18" OR 30"X30"]
PUNCHING AND MOUNTING

(1) 6" FOR WARNING PLAQUE (18"X18")
12" FOR WARNING PLAQUE (30"X30")

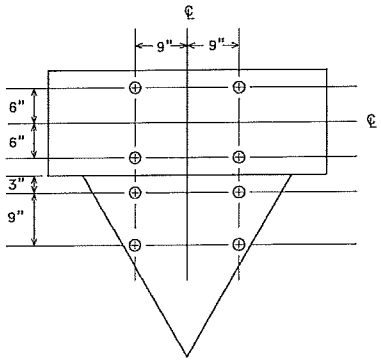

PUNCHING FOR R6-1(54"x18")
& R1-2(36"x36"x36")

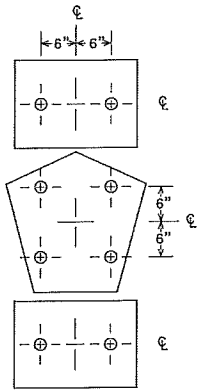

M2-1A [21"x15"] OR
(M3-1A, M3-2A, M3-3A OR M3-4A) [24"x12"] AND
M1-6 [24"x24"] AND
(M5-1A, M5-2A, M6-1A, M6-2A, M6-3A M6-4A, M6-5A OR M6-6A) [21"x15"]
PUNCHING

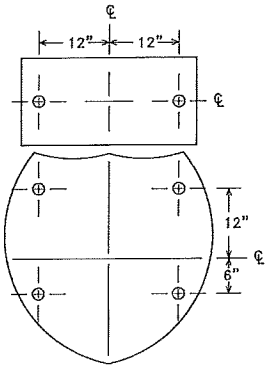

(M3-1A, M3-2A, M3-3A OR M3-4A) [30"x15"] AND
M1-1 [45"x36" OR 36"x36"]
PUNCHING

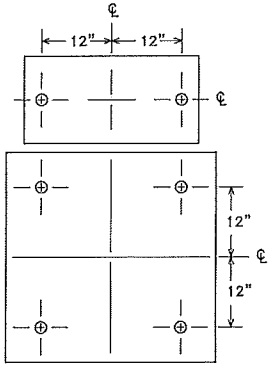

(M3-1, M3-1A, M3-2, M3-2A, M3-3, M3-3A M3-4 OR
M3-4A) [30"x15"] AND (M1-4 OR M1-5A) [36"x36"]
PUNCHING

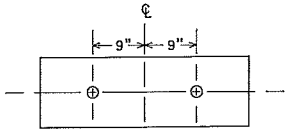

PUNCHING FOR R6-1(36"x12")

TYPE C & D SIGN

STRUCTURAL DETAILS

Sheet 3 of 3

REVISED: 10-2-13

Feb 03, 2016 - 10:43am
K:\cad_eng\PROJECTS\MUNICIPAL\OT393\dwg\OT393 SIGNANGE & STRIPING.dwg

REFERENCE NOTES
① EXISTING AND PROPOSED 4" BITUMINOUS CURB FROM STATION 0+54 TO 2+31.

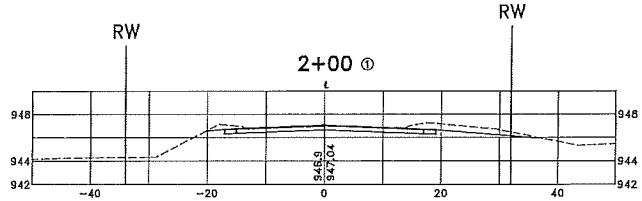

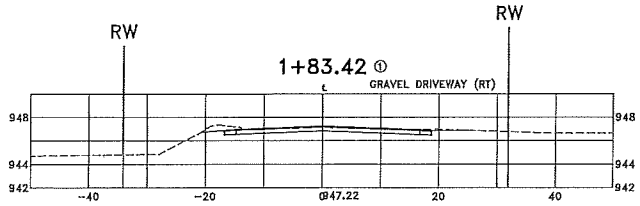

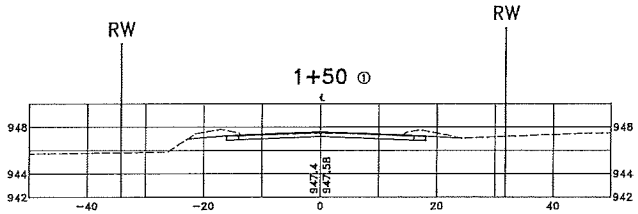

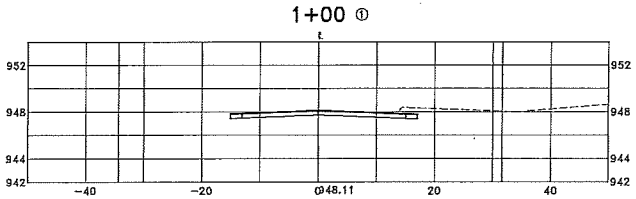

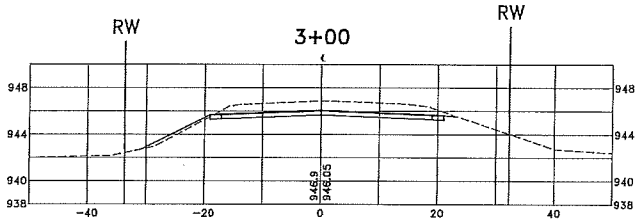

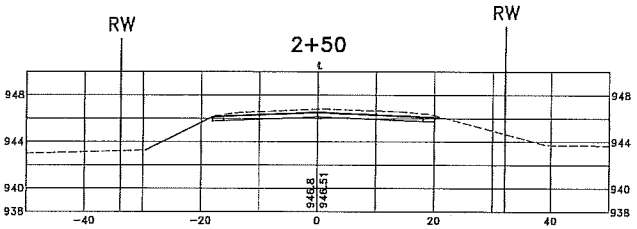

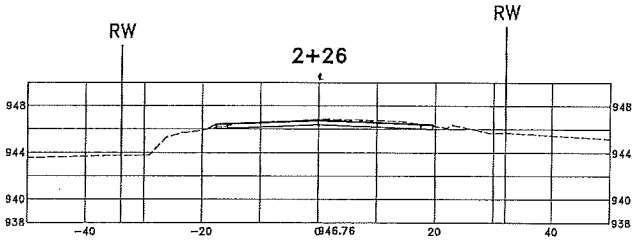

DATE	REVISION

I hereby certify that this plan, specification, or report was prepared by me or under my direct supervision and that I am a duly Licensed Professional Engineer under the laws of the State of Minnesota.

BRENT LARSON, P.E.
Date 2/3/16 Lic. No. 45850

DESIGNED BY: BML
DRAWN BY: EDP
CHECKED BY: RJW

Hakanson Anderson
Civil Engineers and Land Surveyors
3601 Thurston Ave., Anoka, Minnesota 55303
763-427-5860 FAX 763-427-0520
www.hakanson-anderson.com

CITY OF Otsego MINNESOTA

CROSS SECTIONS

80TH STREET NE
CITY OF OTSEGO, MINNESOTA

SHEET XS1 OF XS10 SHEETS

OT393

Feb 03, 2016 - 12:34pm
K:\cad_eng\PROJECTS\MUNICIPAL\OT393\dwg\OT393 BA.dwg

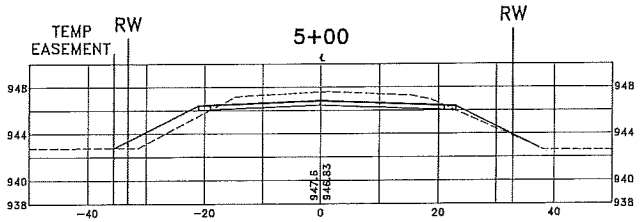

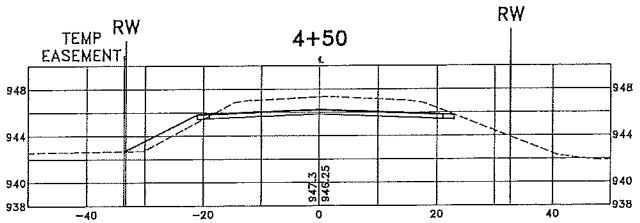

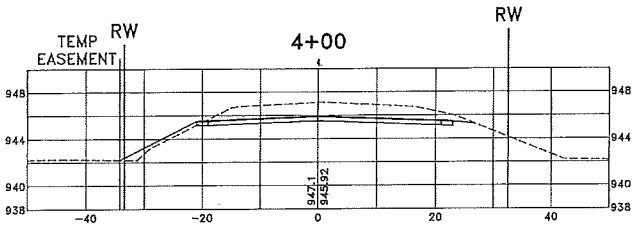

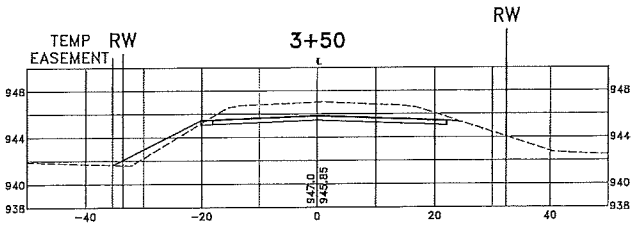

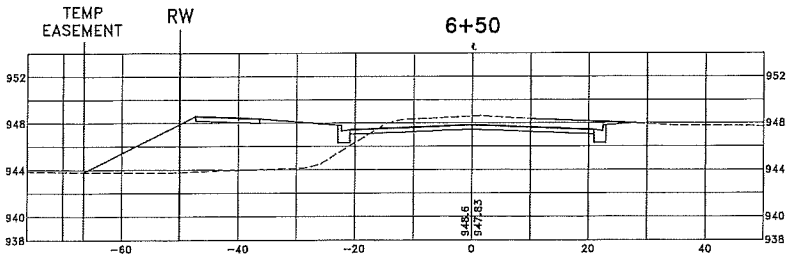

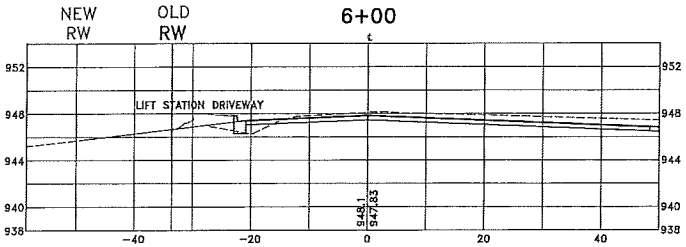

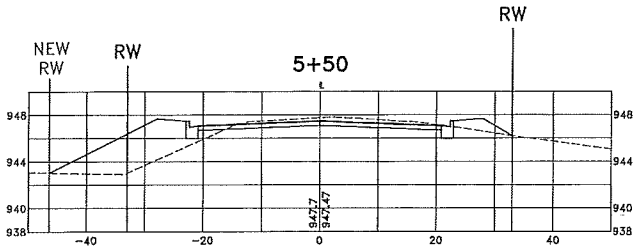

DATE	REVISION

I hereby certify that this plan, specification, or report was prepared by me or under my direct supervision and that I am a duly Licensed Professional Engineer under the laws of the State of Minnesota.

Date 2/3/16 BRENT LARSON, P.E. Lic. No. 45850

DESIGNED BY: BML
DRAWN BY: EDP
CHECKED BY: RJW

Hakanson Anderson
Civil Engineers and Land Surveyors
3601 Thurston Ave., Anoka, Minnesota 55303
763-427-5860 FAX 763-427-0520
www.hakanson-anderson.com

CITY OF Otsego MINNESOTA

CROSS SECTIONS

80TH STREET NE
CITY OF OTSEGO, MINNESOTA

SHEET XS2 OF XS10 SHEETS

OT393

Feb 03, 2016 - 12:35pm
K:\end_proj\PROJECTS\MUNICIPAL\OT393\dwg\OT393 BA.dwg

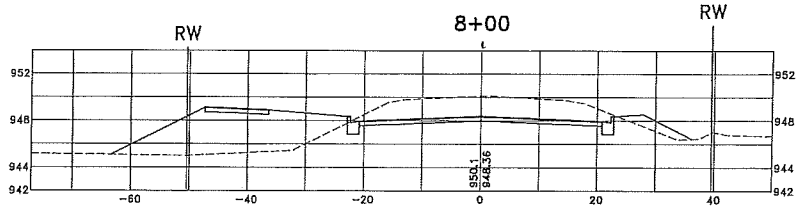

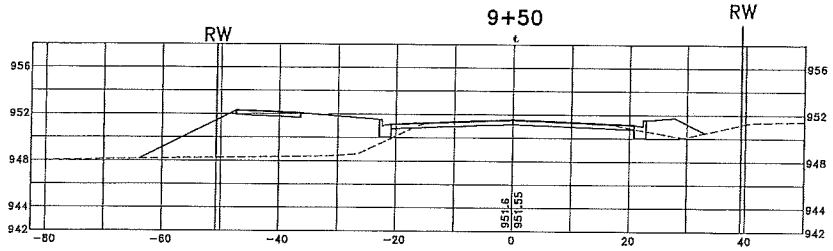

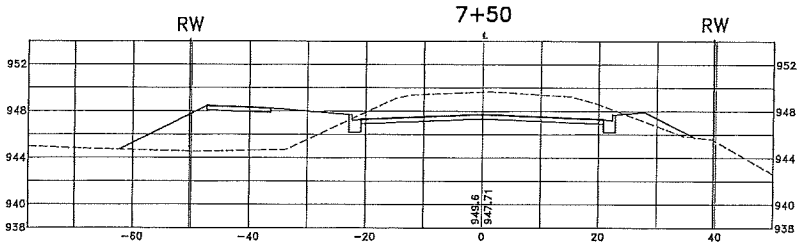

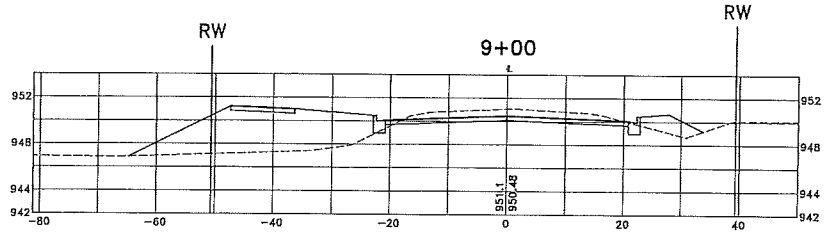

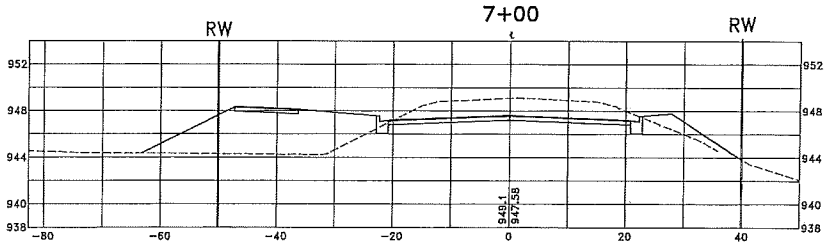

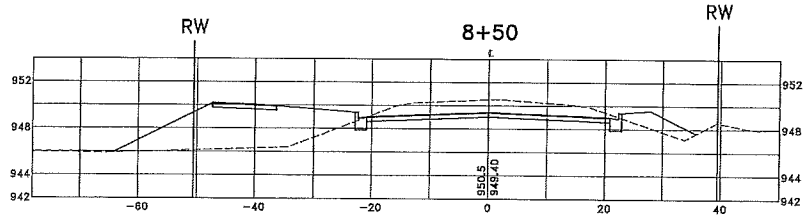

DATE	REVISION

I hereby certify that this plan, specification, or report was prepared by me or under my direct supervision and that I am a duly Licensed Professional Engineer under the laws of the State of Minnesota.

BRENT LARSON, P.E.
Date 2/3/16 Lic. No. 45850

DESIGNED BY: BWL
DRAWN BY: EDP
CHECKED BY: RJW

Hakanson Anderson
Civil Engineers and Land Surveyors
3601 Thurston Ave., Anoka, Minnesota 55303
763-427-5860 FAX 763-427-0520
www.hakanson-anderson.com

CITY OF Otsego MINNESOTA

CROSS SECTIONS

80TH STREET NE
CITY OF OTSEGO, MINNESOTA

SHEET XS3 OF XS10 SHEETS

OT393

Feb 03, 2016 – 12:35pm
K:\civil_eng\PROJECTS\MUNICIPAL\OT393\dwg\OT393 BA.dwg

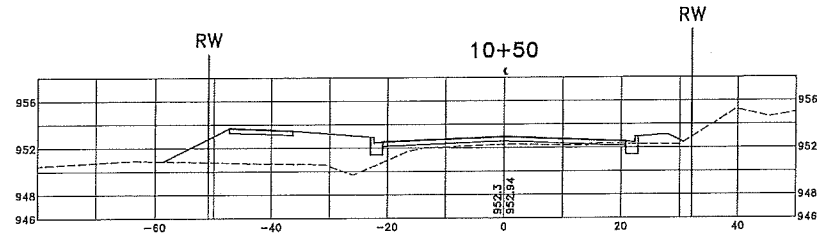

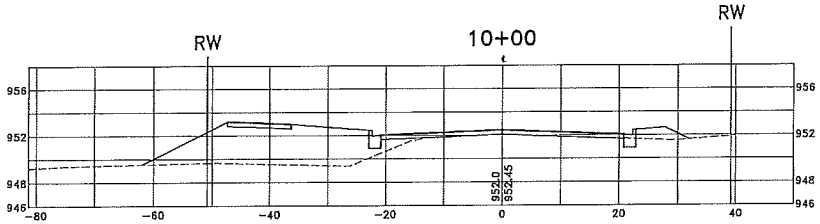

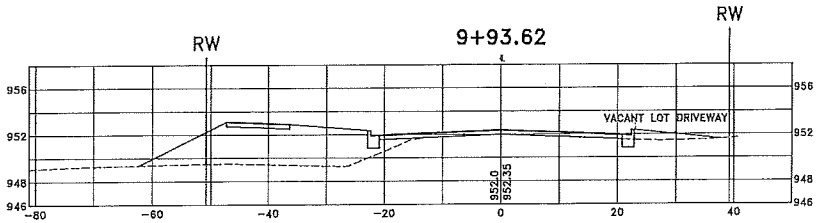

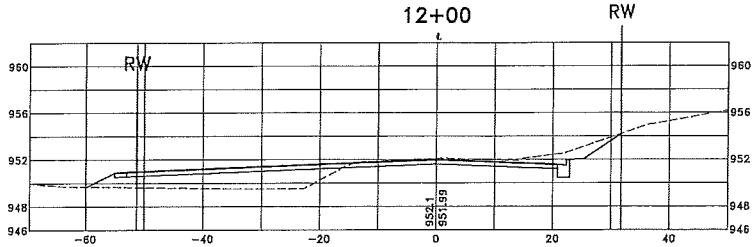

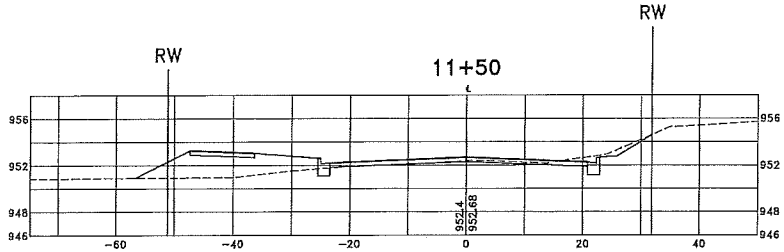

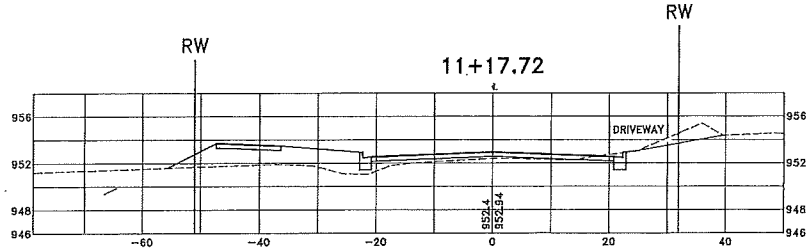

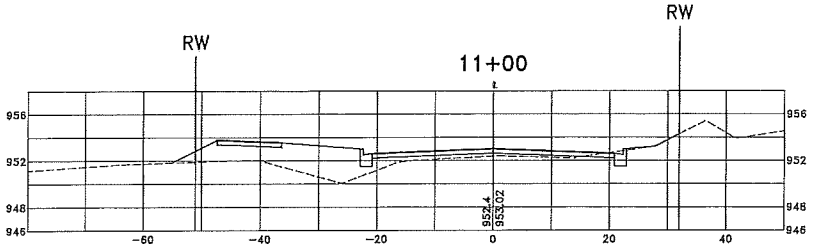

DATE	REVISION

I hereby certify that this plan, specification, or report was prepared by me or under my direct supervision and that I am a duly Licensed Professional Engineer under the laws of the State of Minnesota.

BRENT LARSON, P.E.
Date 2/3/16 Lic. No. 45850

DESIGNED BY: BML
DRAWN BY: EDP
CHECKED BY: RJW

Hakanson Anderson
Civil Engineers and Land Surveyors
3601 Thurston Ave., Anoka, Minnesota 55303
763-427-5860 FAX 763-427-0520
www.hakanson-anderson.com

CITY OF Otsego MINNESOTA

CROSS SECTIONS

80TH STREET NE
CITY OF OTSEGO, MINNESOTA

SHEET XS4 OF XS10 SHEETS

OT393

Feb 03, 2016 - 12:35pm
K:\cad_eng\PROJECTS\MUNICIPAL\OT393\dwg\OT393 BA.dwg

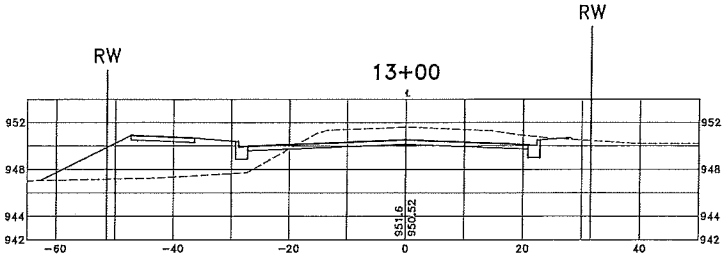

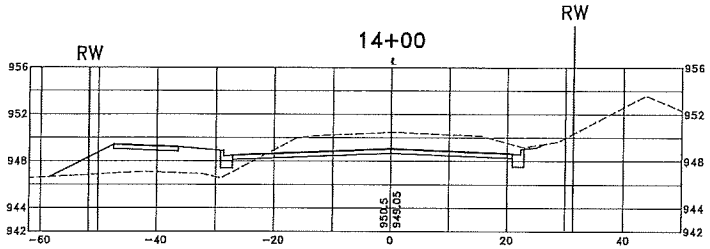

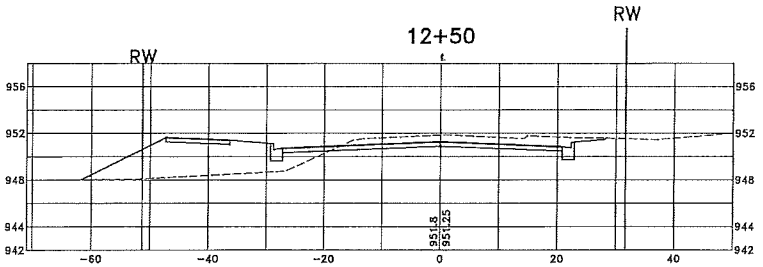

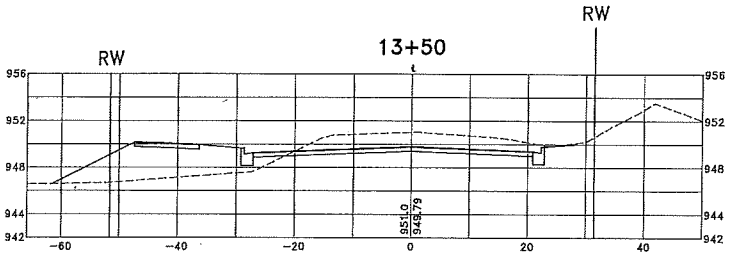

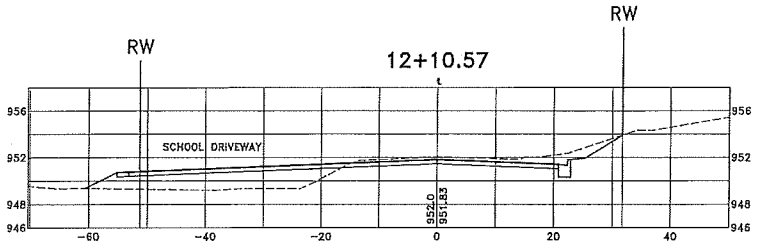

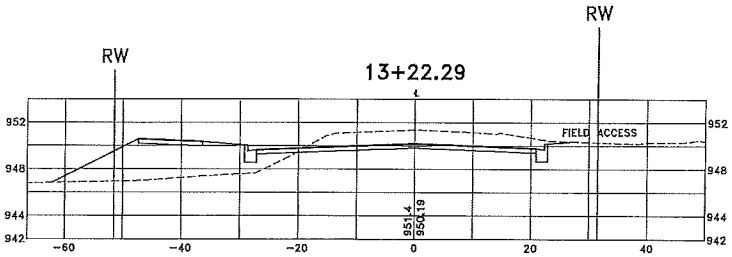

DATE	REVISION

I hereby certify that this plan, specification, or report was prepared by me or under my direct supervision and that I am a duly Licensed Professional Engineer under the laws of the State of Minnesota.

BRENT LARSON, P.E.
Date 2/3/18 Lic. No. 45850

DESIGNED BY BML
DRAWN BY EDP
CHECKED BY RJW

Hakanson Anderson
Civil Engineers and Land Surveyors
3601 Thurston Ave., Anoka, Minnesota 55303
763-427-5860 FAX 763-427-0520
www.hakanson-anderson.com

CITY OF Otsego MINNESOTA

CROSS SECTIONS

80TH STREET NE
CITY OF OTSEGO, MINNESOTA

SHEET XS5 OF XS10 SHEETS

OT393

Feb 03, 2016 - 12:36pm
N:\end_eng\PROJECTS\MUNICIPAL\OT393\dwg\OT393 01A.dwg

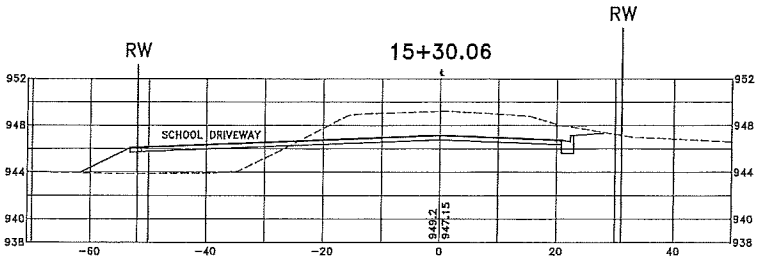

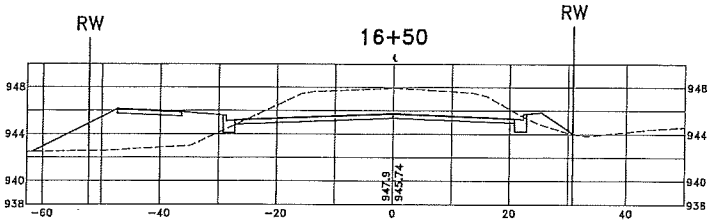

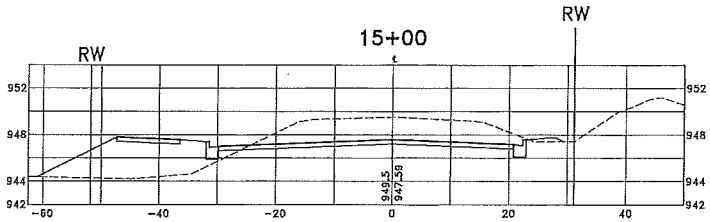

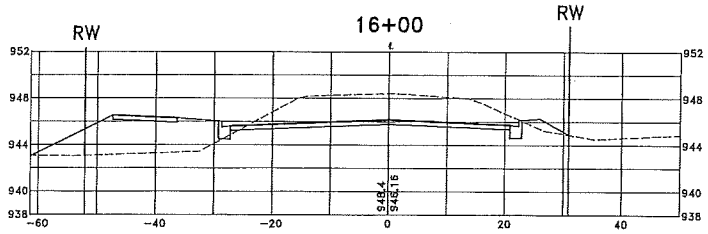

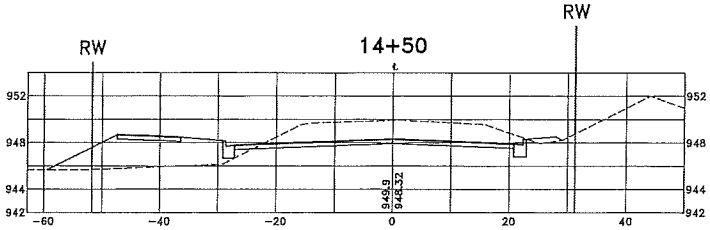

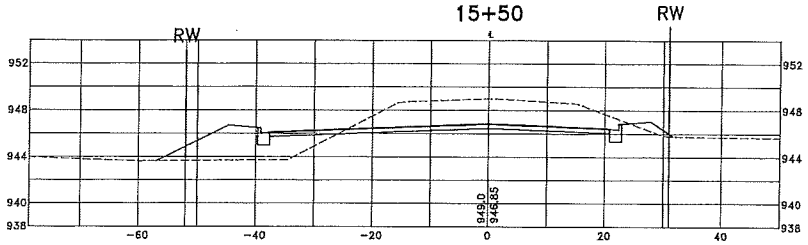

DATE	REVISION

I hereby certify that this plan, specification, or report was prepared by me or under my direct supervision and that I am a duly Licensed Professional Engineer under the laws of the State of Minnesota.

BRENT LARSON, P.E.
Date 2/3/16 Lic. No. 45850

DESIGNED BY: BML
DRAWN BY: EDP
CHECKED BY: RJW

Hakanson Anderson
Civil Engineers and Land Surveyors
3601 Thurston Ave., Anoka, Minnesota 55303
763-427-5860 FAX 763-427-0520
www.hakanson-anderson.com

CITY OF Otsego MINNESOTA

CROSS SECTIONS

80TH STREET NE
CITY OF OTSEGO, MINNESOTA

SHEET XS6 OF XS10 SHEETS

OT393

Feb 03, 2016 – 12:36pm
X:\civil_eng\PROJECTS\MUNICIPAL\OT393\dwg\OT393 BA.dwg

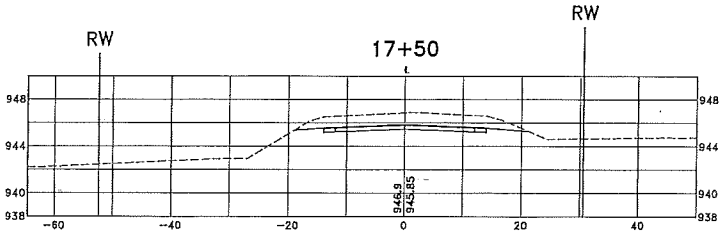

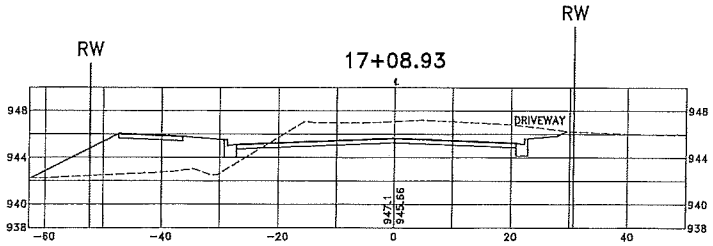

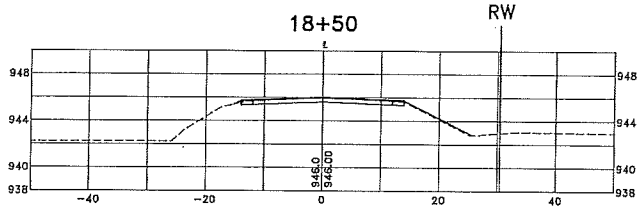

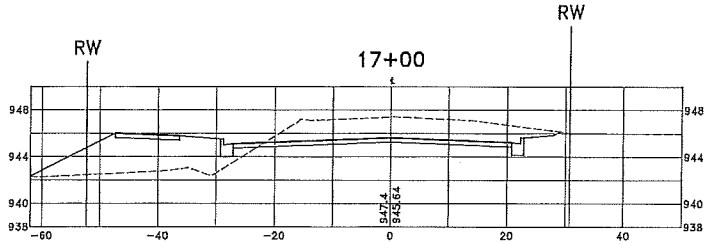

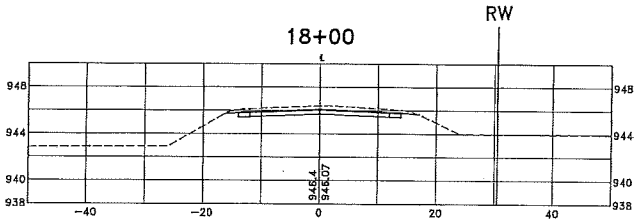

DATE	REVISION

I hereby certify that this plan, specification, or report was prepared by me or under my direct supervision and that I am a duly Licensed Professional Engineer under the laws of the State of Minnesota.

BRENT LARSON, P.E.
Date 2/3/16 Lic. No. 45850

DESIGNED BY: BNL
DRAWN BY: EDP
CHECKED BY: RJW

Hakanson Anderson
Civil Engineers and Land Surveyors
3601 Thurston Ave., Anoka, Minnesota 55303
763-427-5860 FAX 763-427-0520
www.hakanson-anderson.com

CITY OF Otsego MINNESOTA

CROSS SECTIONS

80TH STREET NE
CITY OF OTSEGO, MINNESOTA

SHEET XS7 OF XS10 SHEETS

OT393

Feb 03, 2016 - 12:36pm
K:\Land_Proj\PROJECTS\MUNICIPAL\OT393\dwg\OT393 BA.dwg

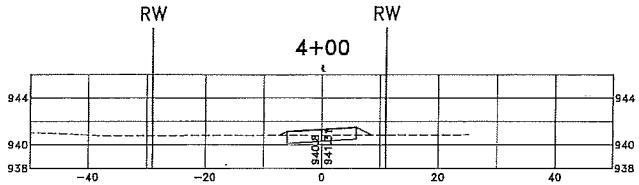

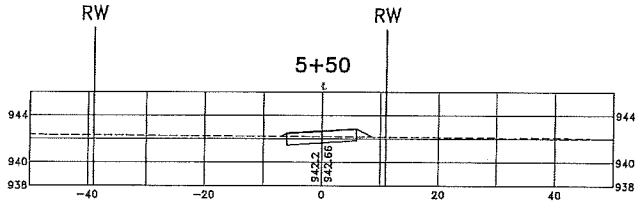

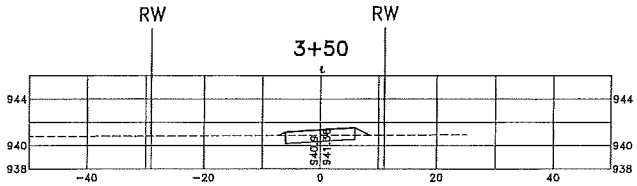

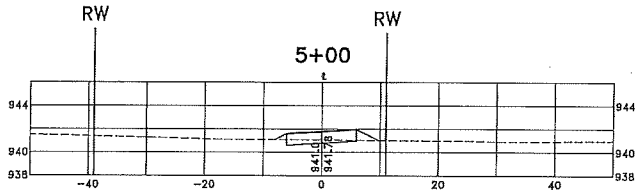

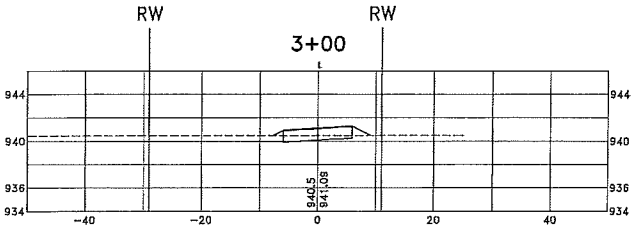

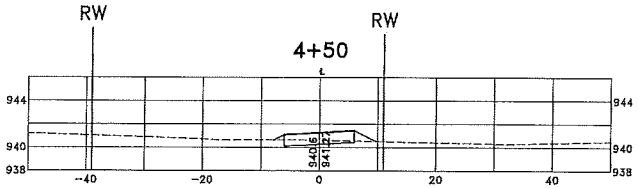

DATE	REVISION

I hereby certify that this plan, specification, or report was prepared by me or under my direct supervision and that I am a duly Licensed Professional Engineer under the laws of the State of Minnesota.

BREN CARSON, P.E.
Date 2/3/18 Lic. No. 45850

DESIGNED BY: BWL
DRAWN BY: EDP
CHECKED BY: RJW

Hakanson Anderson
Civil Engineers and Land Surveyors
3601 Thurston Ave., Anoka, Minnesota 55303
763-427-5860 FAX 763-427-0520
www.hakanson-anderson.com

CITY OF Otsego MINNESOTA

CROSS SECTIONS

LIFT STATION ACCESS DRIVEWAY
CITY OF OTSEGO, MINNESOTA

SHEET XS9 OF XS10 SHEETS

OT393

Feb 03, 2016 - 12:39pm
K:\and_eng\PROJECTS\MUNICIPAL\OT393\dwg\OT393 BA.dwg

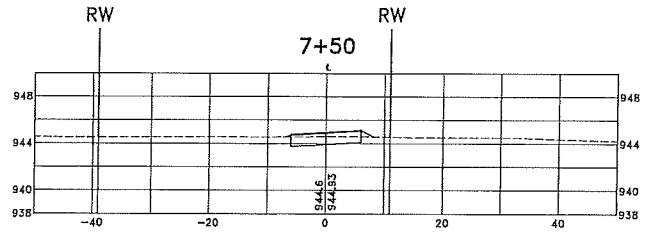

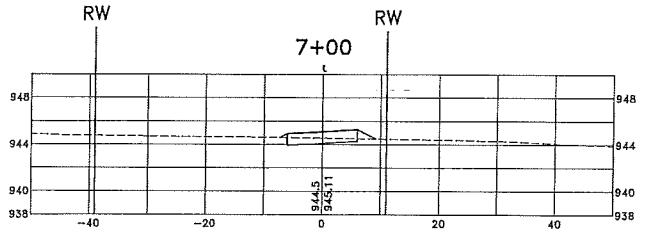

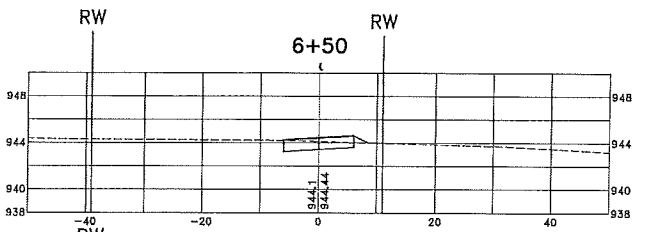

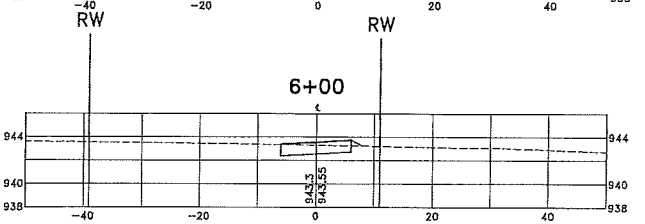

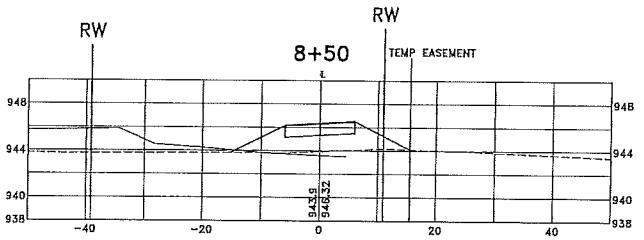

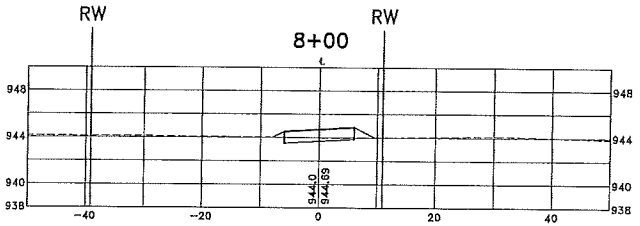

DATE	REVISION

I hereby certify that this plan, specification, or report was prepared by me or under my direct supervision and that I am a duly Licensed Professional Engineer under the laws of the State of Minnesota.

BRENT CARSON, P.E.
Date 2/3/16 Lic. No. 45850

ISSUED BY: BWL
DRAWN BY: EDP
CHECKED BY: RJW

Hakanson Anderson
Civil Engineers and Land Surveyors
3601 Thurston Ave., Anoka, Minnesota 55303
763-427-5860 FAX 763-427-0520
www.hakanson-anderson.com

CITY OF Otsego MINNESOTA

CROSS SECTIONS

LIFT STATION ACCESS DRIVEWAY
CITY OF OTSEGO, MINNESOTA

SHEET XS10 OF XS10 SHEETS

OT393

File: OT_2016 - 12:57pm
K:\Land_Proj\PROJECTS\MUNICIPAL\OT393\dwg\OT393 IBA.dwg